Brookhaven

3/4” wall stop valve

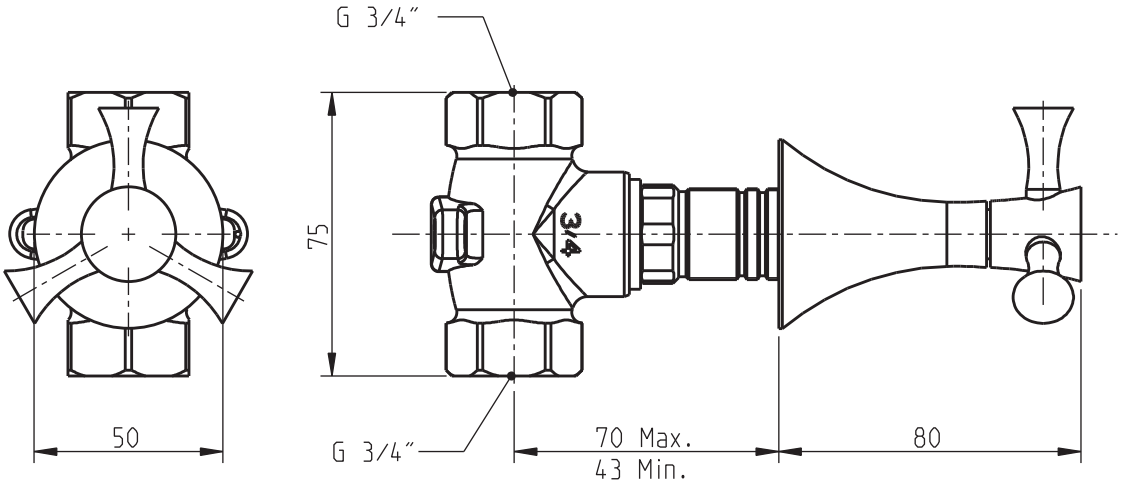

code: 32217MWKxxx.U

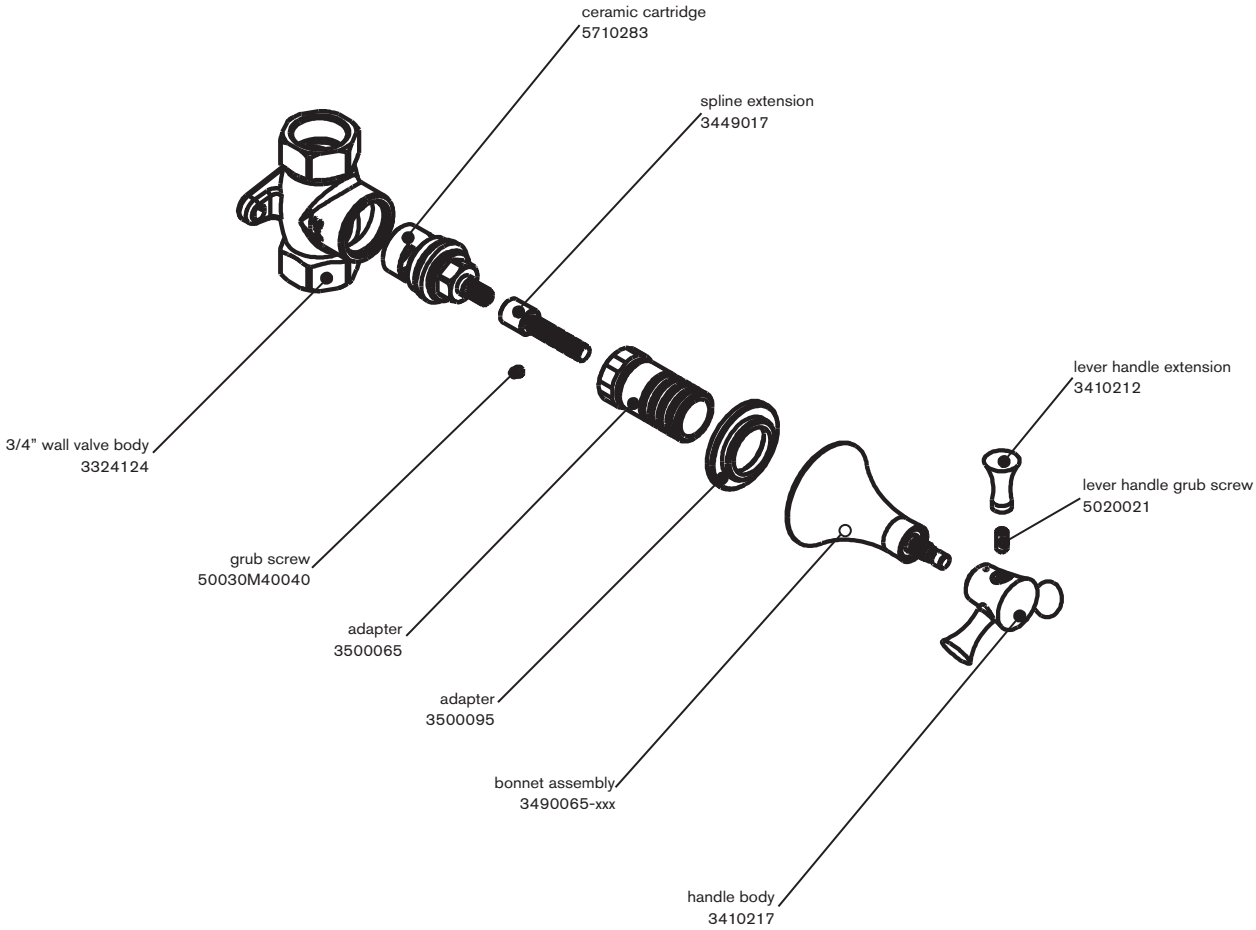

COMPLETE **BATH** SOLUTIONS

www.cifial.eu

Notes:
xxx represent different finishes

Installer: Please leave all leaflets with the building owner to file for future reference

5665533
983MW004U00