Brookhaven

3/4” wall stop valve

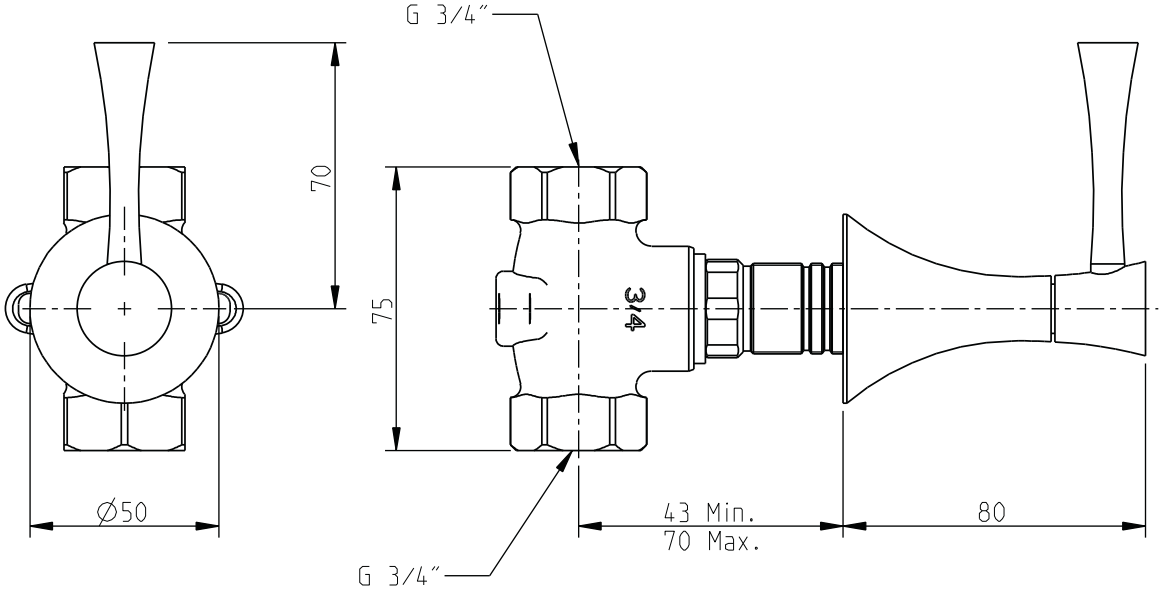

CIFIAL

www.cifial.eu

dimensions mm

5665442
983BS000U00

code: 32217BS-xxx.U

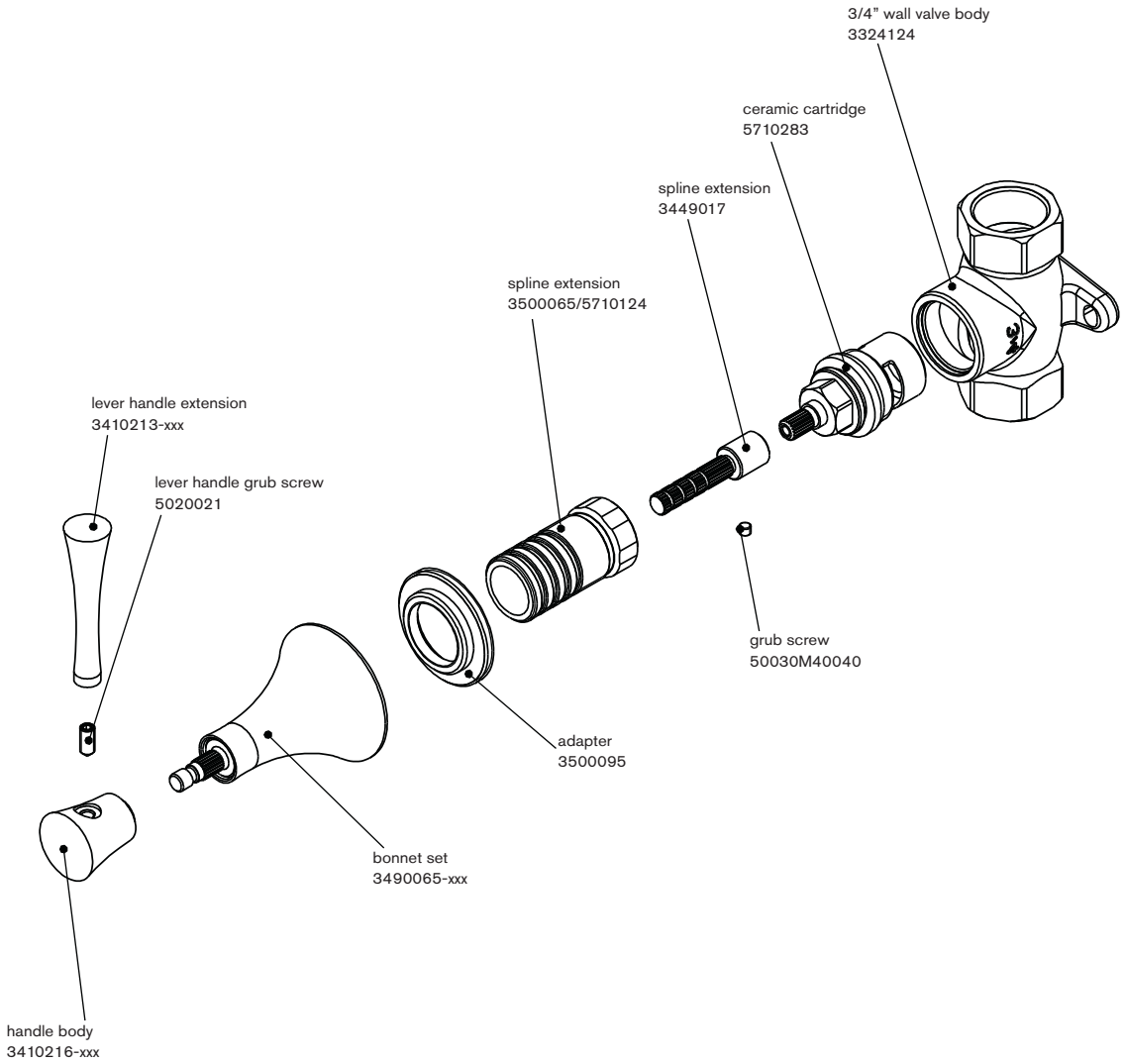

COMPLETE
BATH
SOLUTIONS

www.cifial.eu

Notes:
xxx represent different finishes

Installer: Please leave all leaflets with the building owner to file for future reference

5665442
983BS000U00