technical specifications

COULE

Mono Basin Mixer

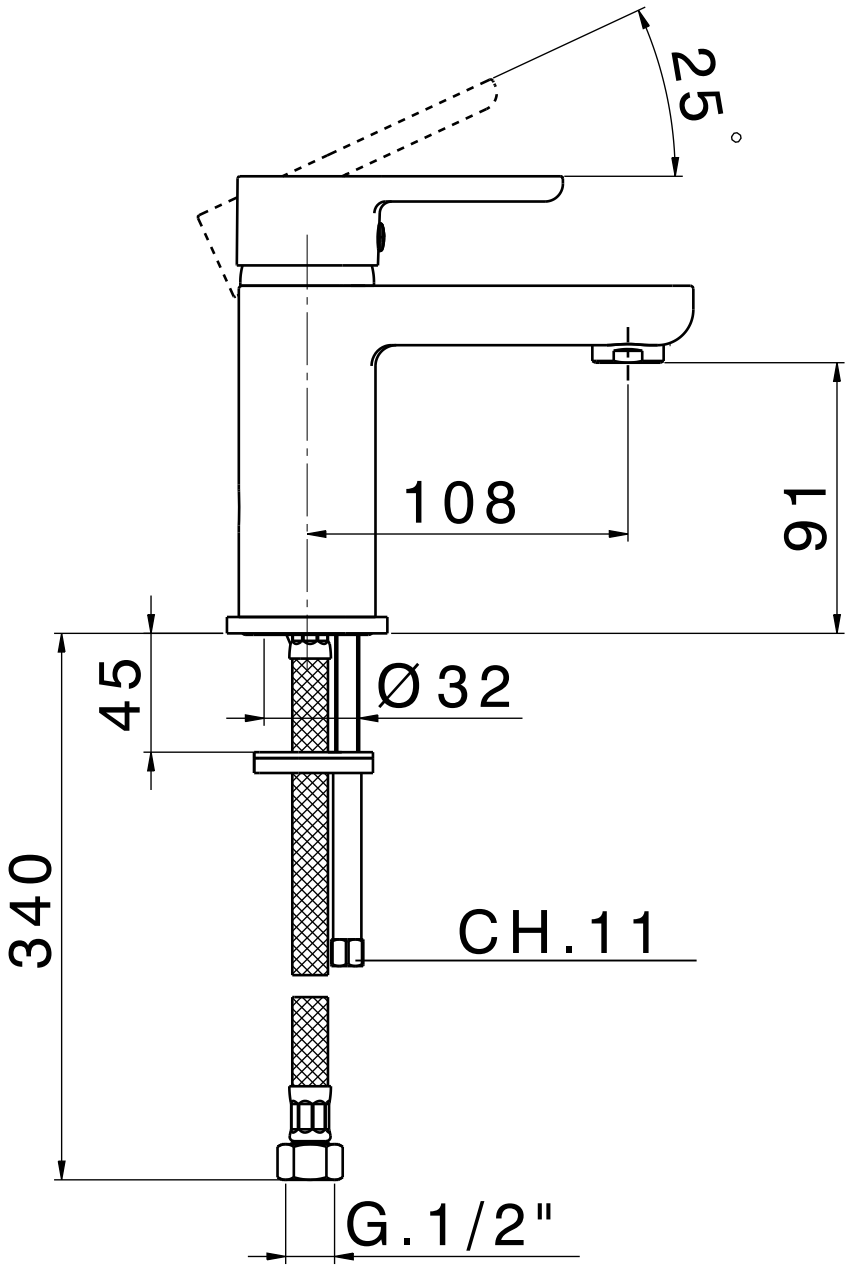

CIFIAL®
www.cifial.co.uk
sales@cifial.co.uk

dimensions mm

Code: 32400CL

technical specifications

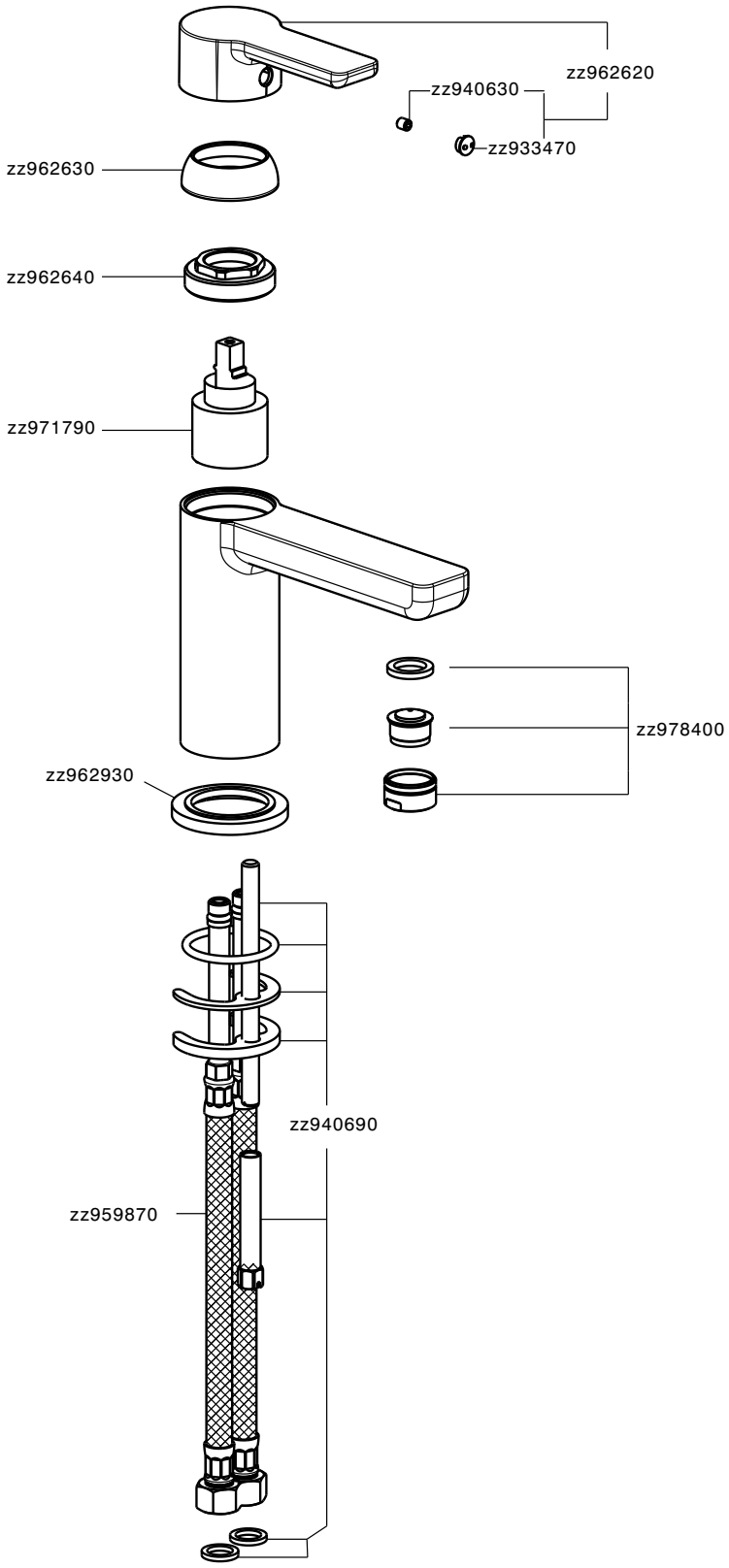

CIFIAL

www.cifial.co.uk
sales@cifial.co.uk

dimensions mm