COULE

2 hole wall basin mixer

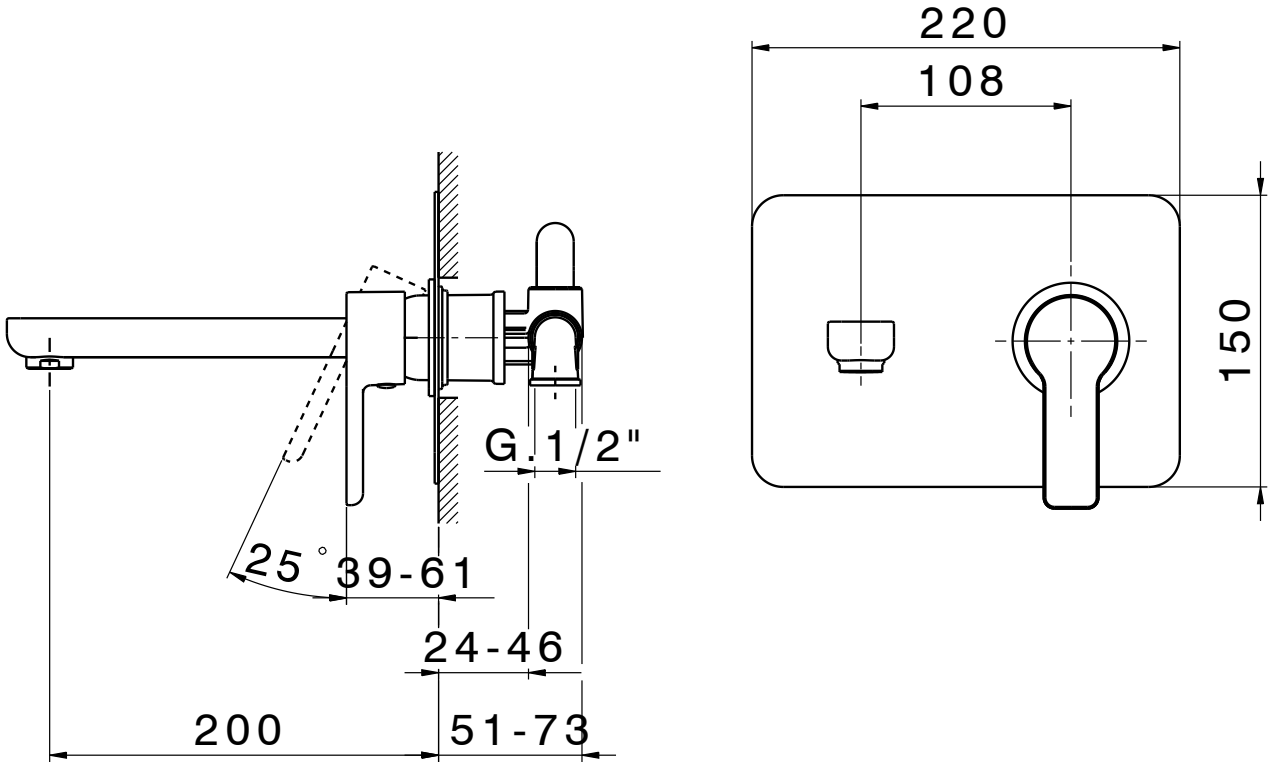

CIFIAL®
www.cifial.co.uk
sales@cifial.co.uk

dimensions mm

Code: 32402CL

technical specifications

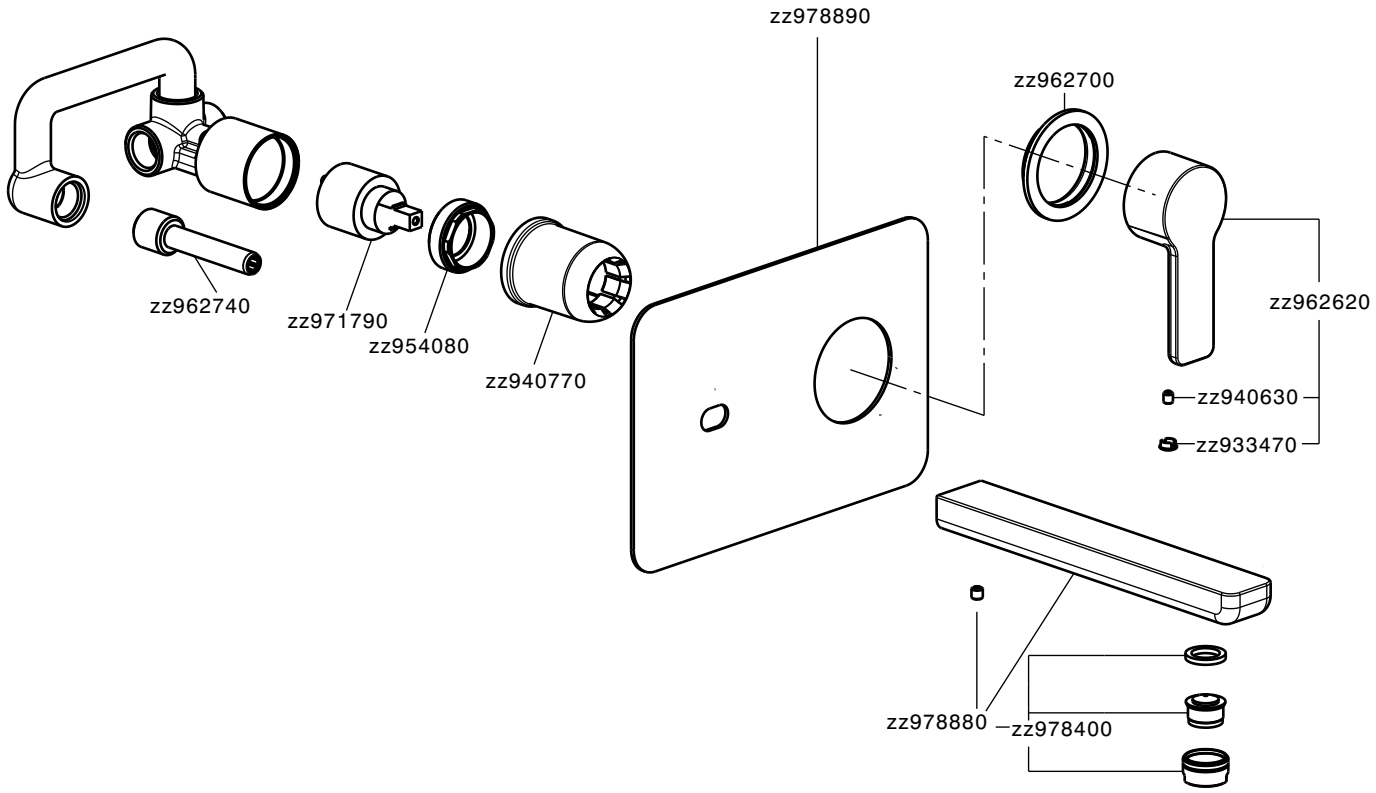

CIFIAL
www.cifial.co.uk
sales@cifial.co.uk

dimensions mm