Code: 32400PCU

CUDO

Mono Basin Mixer with pop-up waste

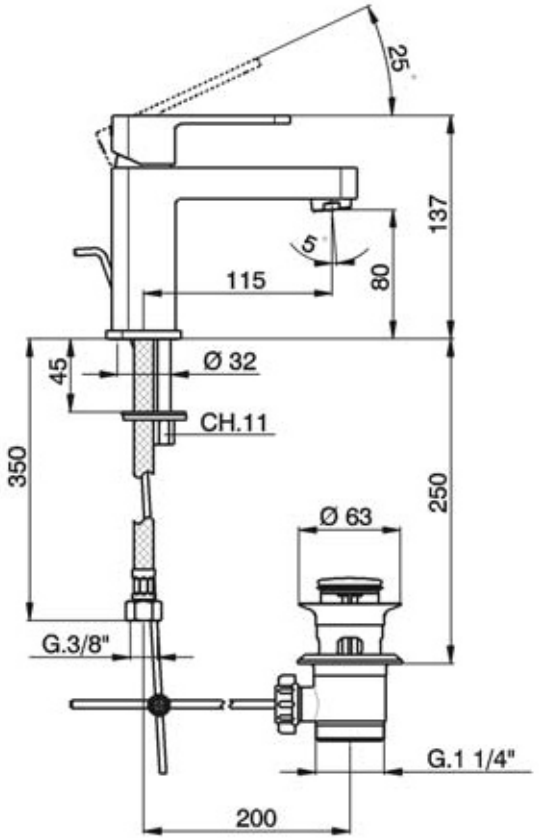

CIFIAL®
www.cifial.co.uk
sales@cifial.co.uk

dimensions mm

Code: 32400PCU

technical specifications

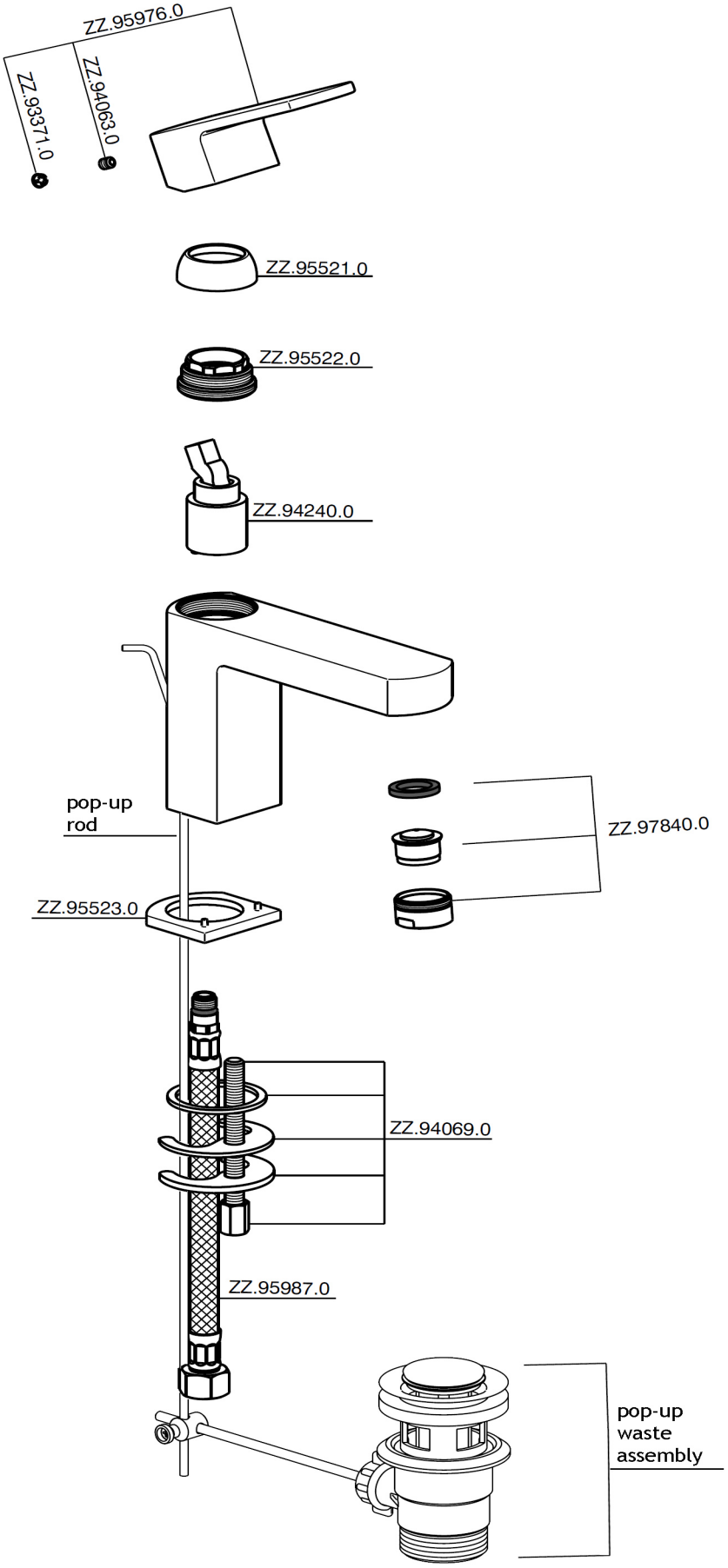

CIFIAL

www.cifial.co.uk
sales@cifial.co.uk

dimensions mm