CUDO

2 hole wall basin mixer

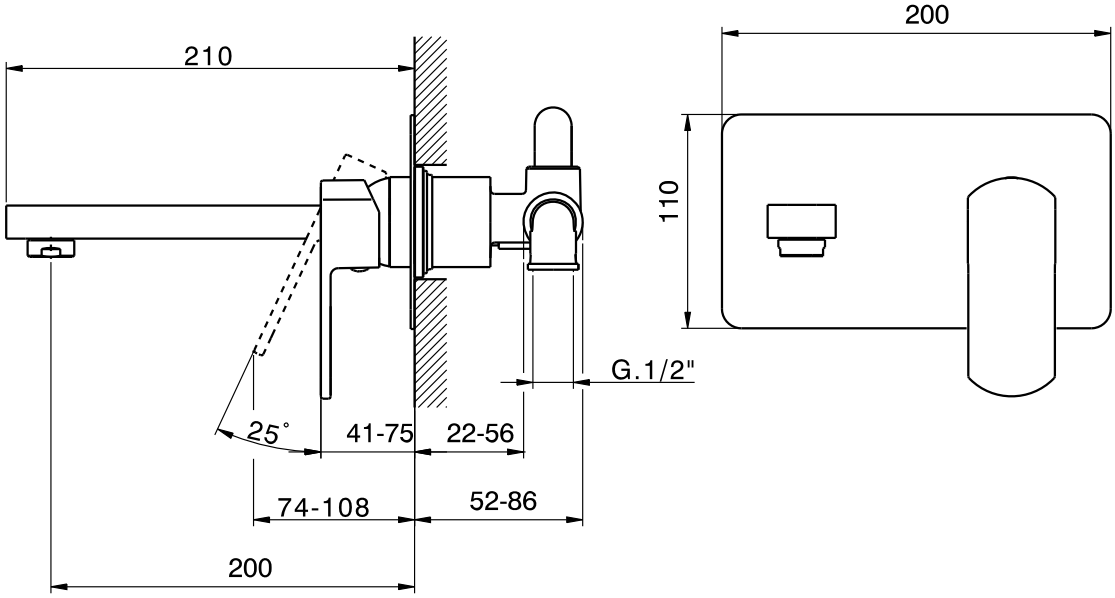

CIFIAL

www.cifial.co.uk
sales@cifial.co.uk

dimensions mm

Code: 32402CU

technical specifications

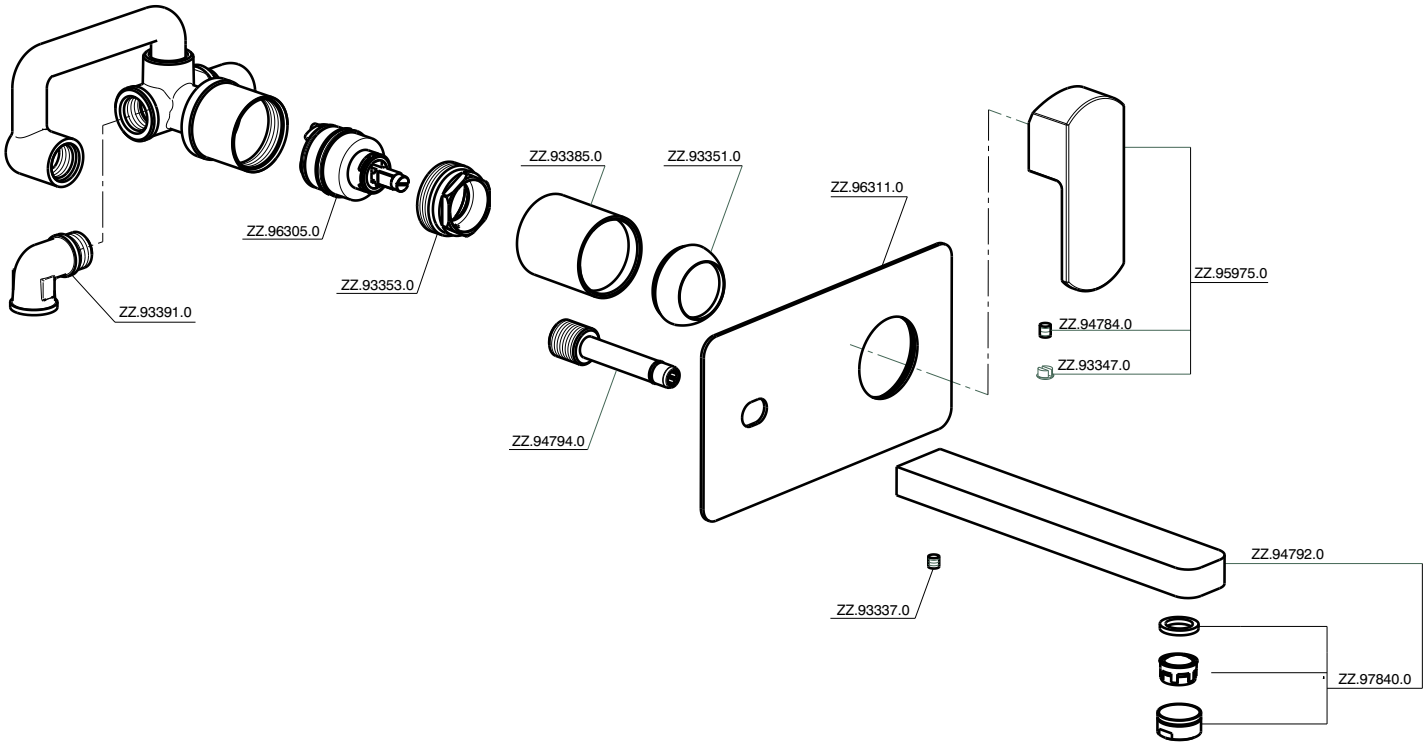

CIFIAL

www.cifial.co.uk
sales@cifial.co.uk

dimensions mm