technical specifications

EDWARDIAN

3 hole deck basin mixer

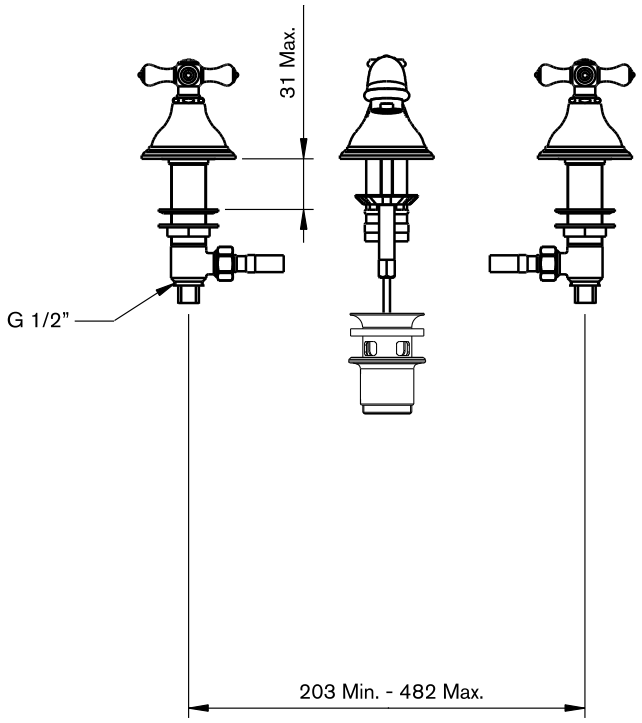

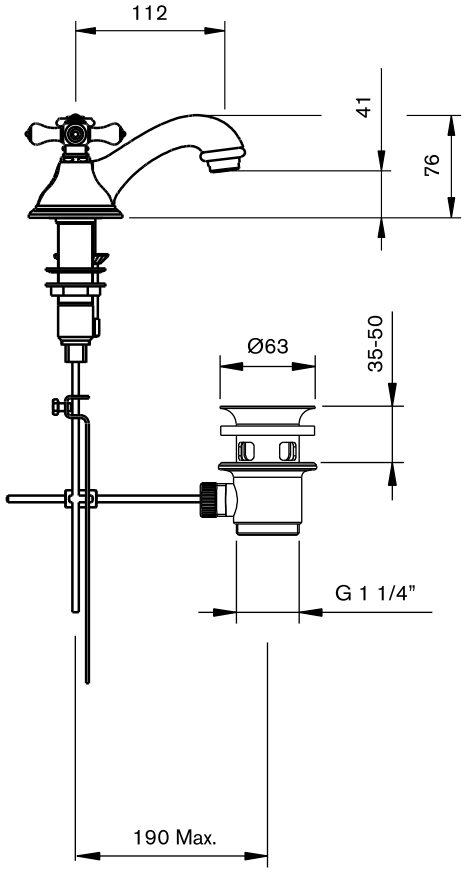

CIFIAL

www.cifial.co.uk
cifialuk@btconnect.com

dimensions mm

Code: 31131ED

technical specifications

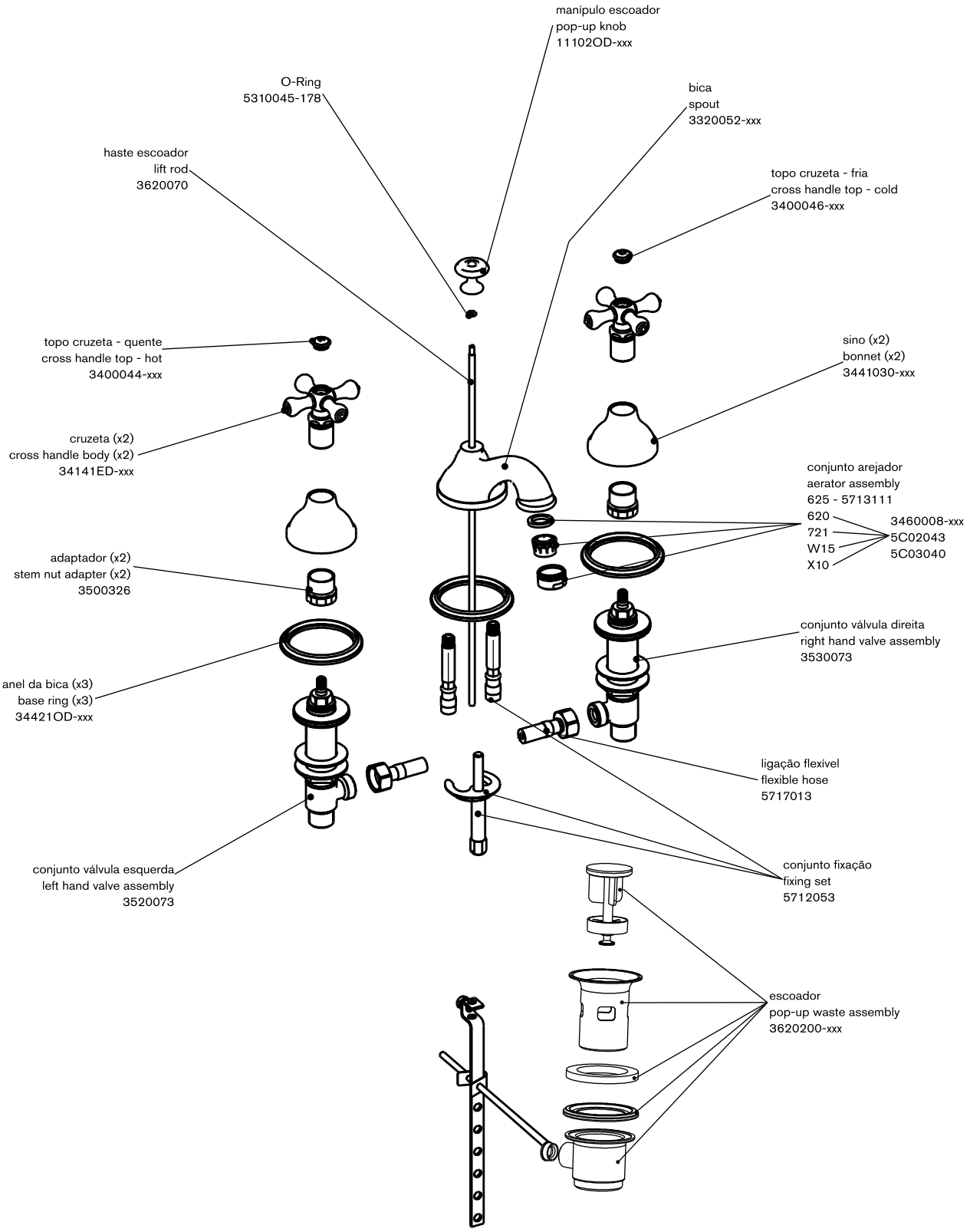

CIFIAL

www.cifial.co.uk
cifialuk@btconnect.com

Installer: Please leave all leaflets with the building owner to file for future reference