Edwardian

3/4” wall stop valve

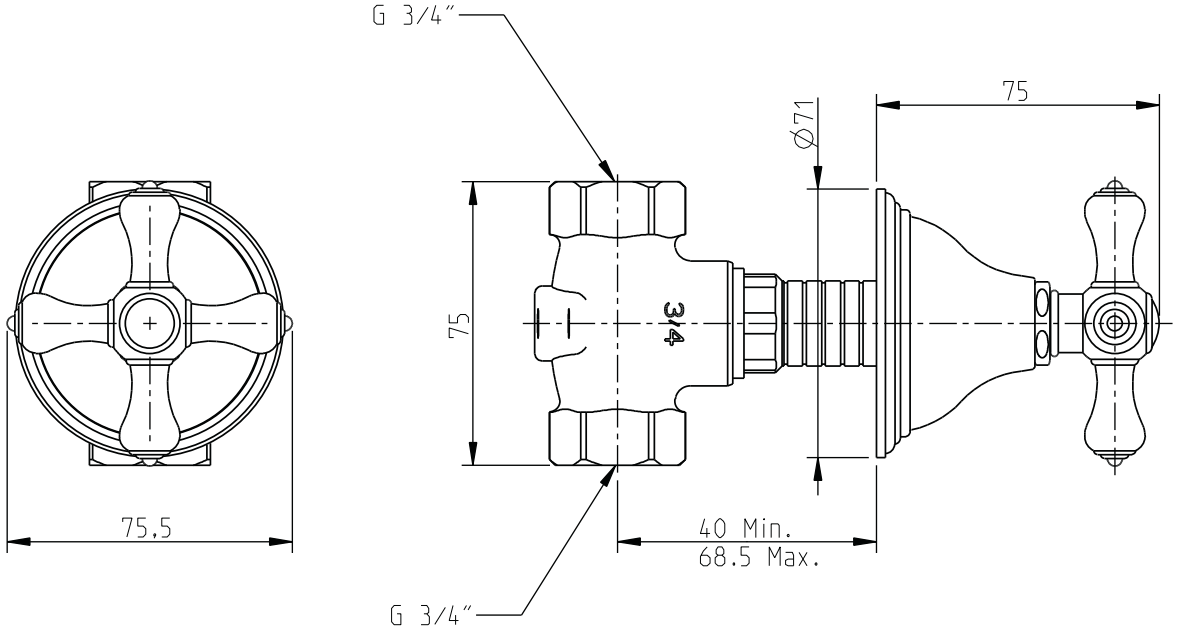

code: 32217ED -xxx.U

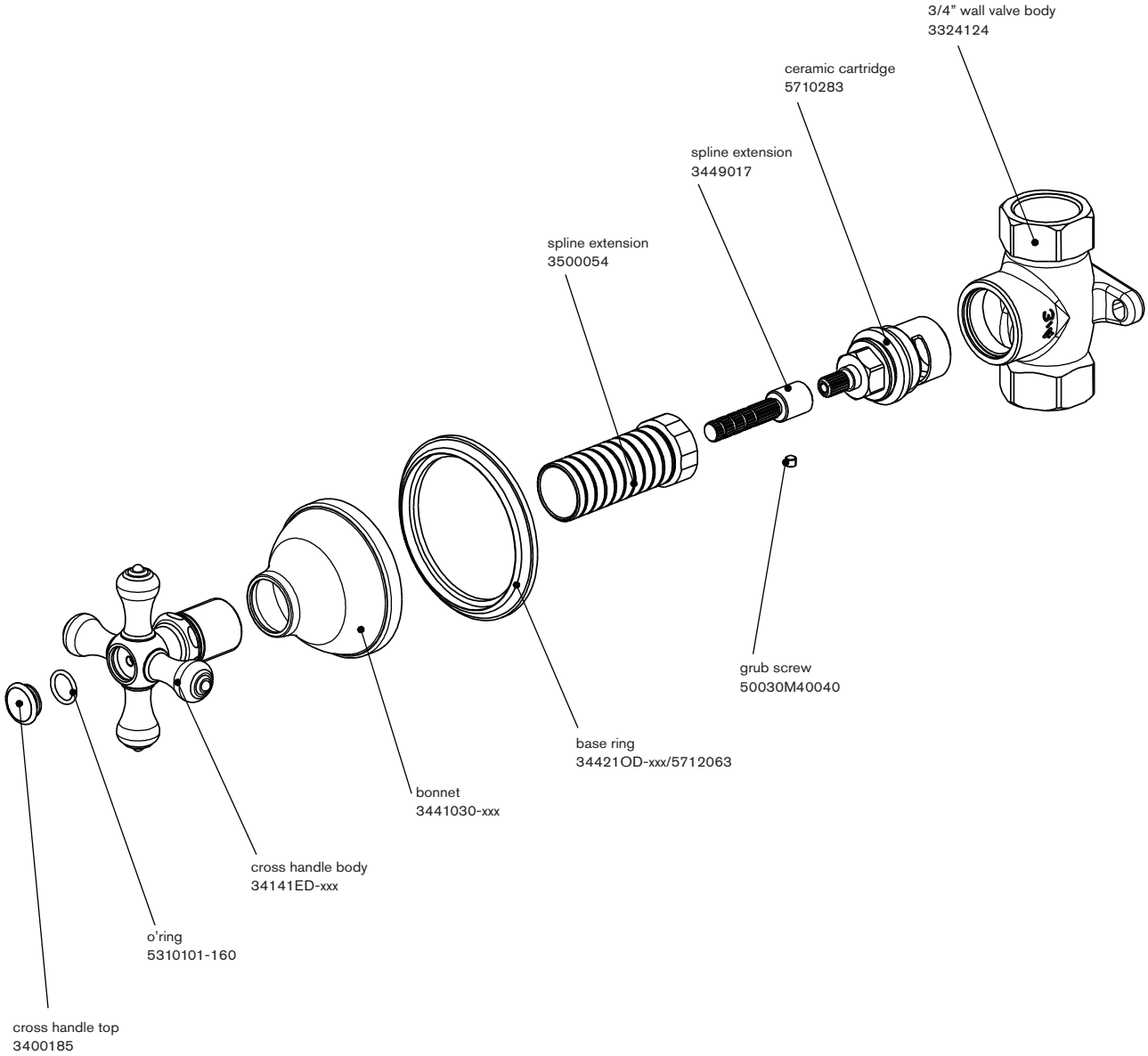

COMPLETE
BATH
SOLUTIONS

www.cifial.eu

Notes:
xxx represent different finishes

Installer: Please leave all leaflets with the building owner to file for future reference

5665443
983ED001U00