Code: 32401EM

EMMIE

Tall Mono Basin Mixer

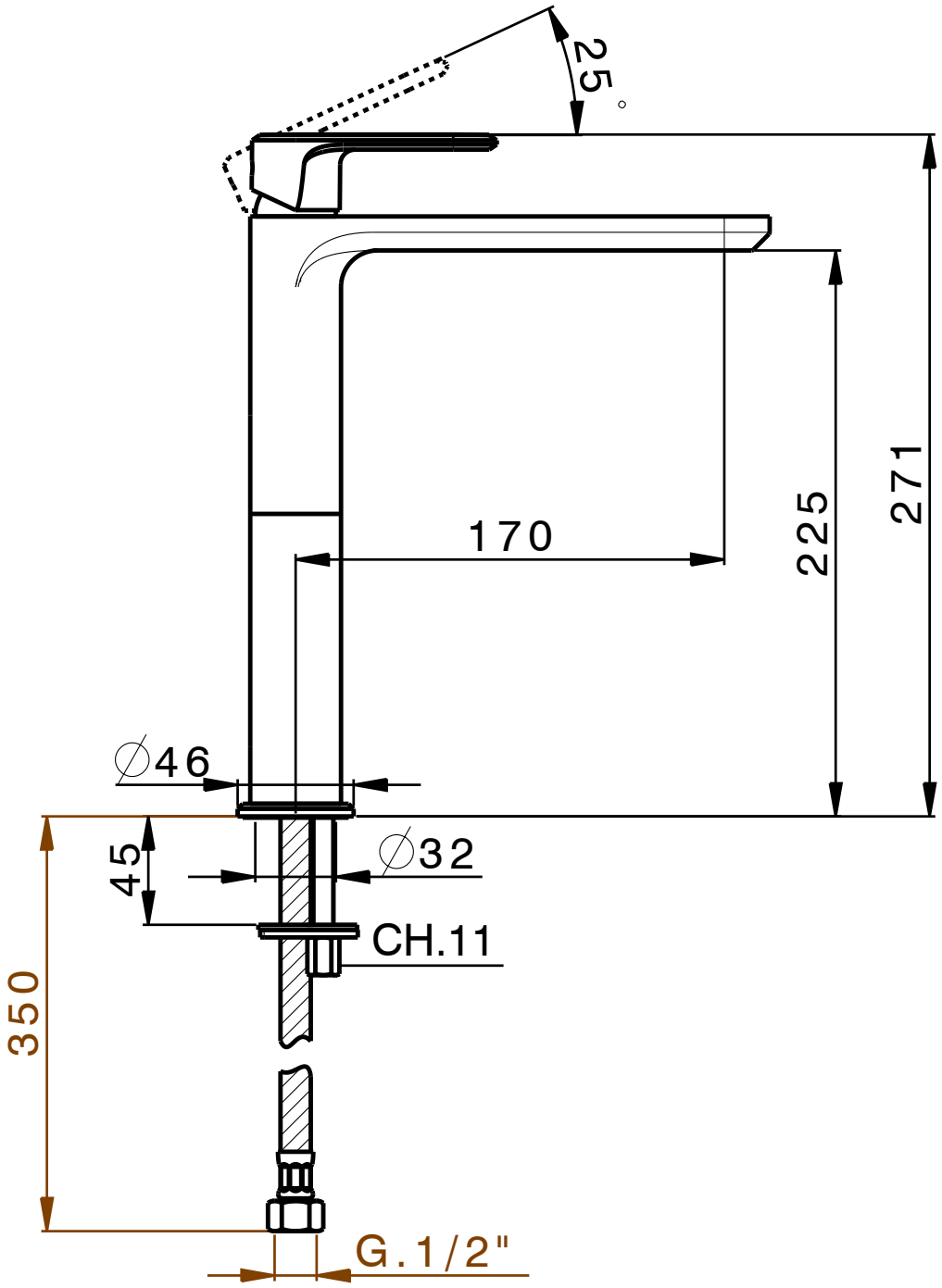

CIFIAL®
www.cifial.co.uk
sales@cifial.co.uk

dimensions mm

Code: 32401EM

technical specifications

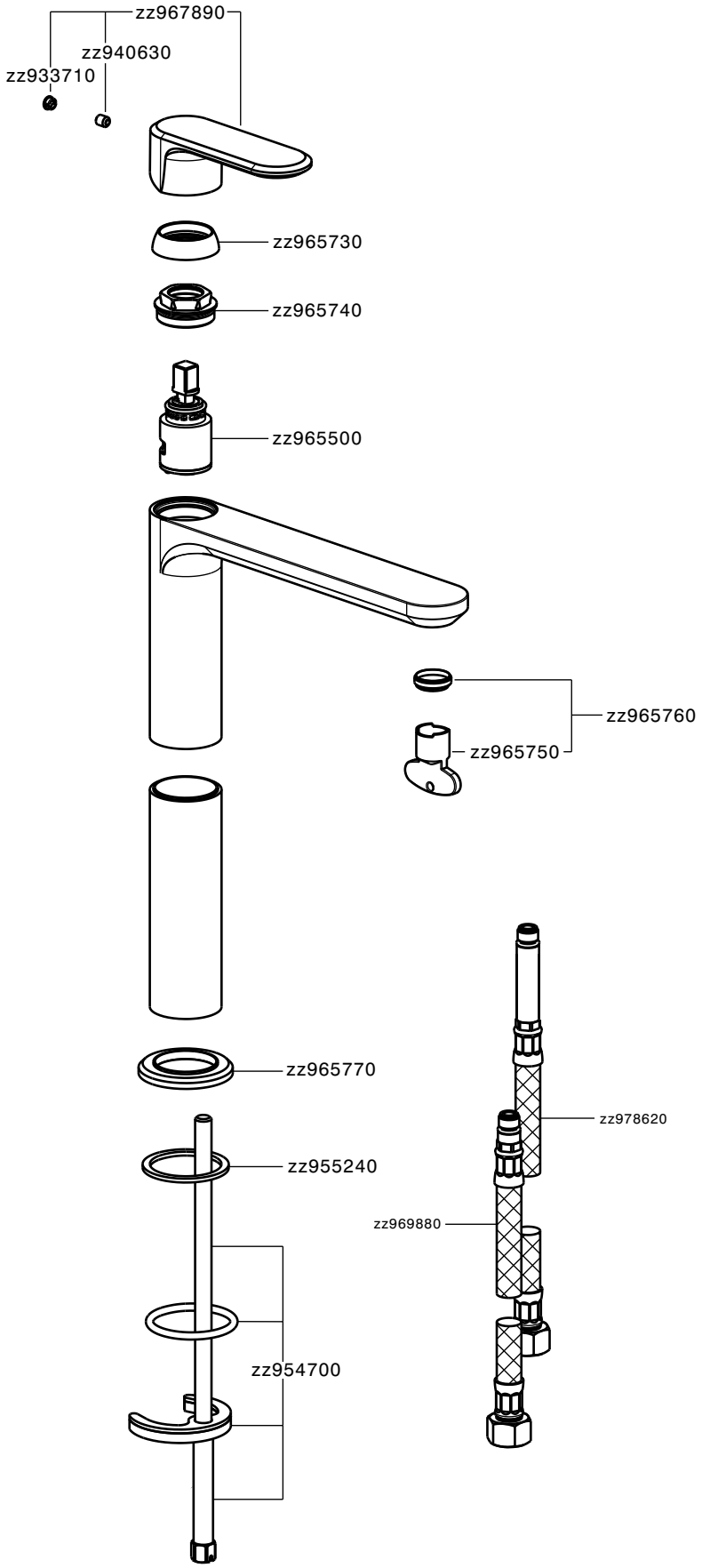

CIFIAL
www.cifial.co.uk
sales@cifial.co.uk

dimensions mm