EMMIE

Concealed Manual Bath/Shower Mixer

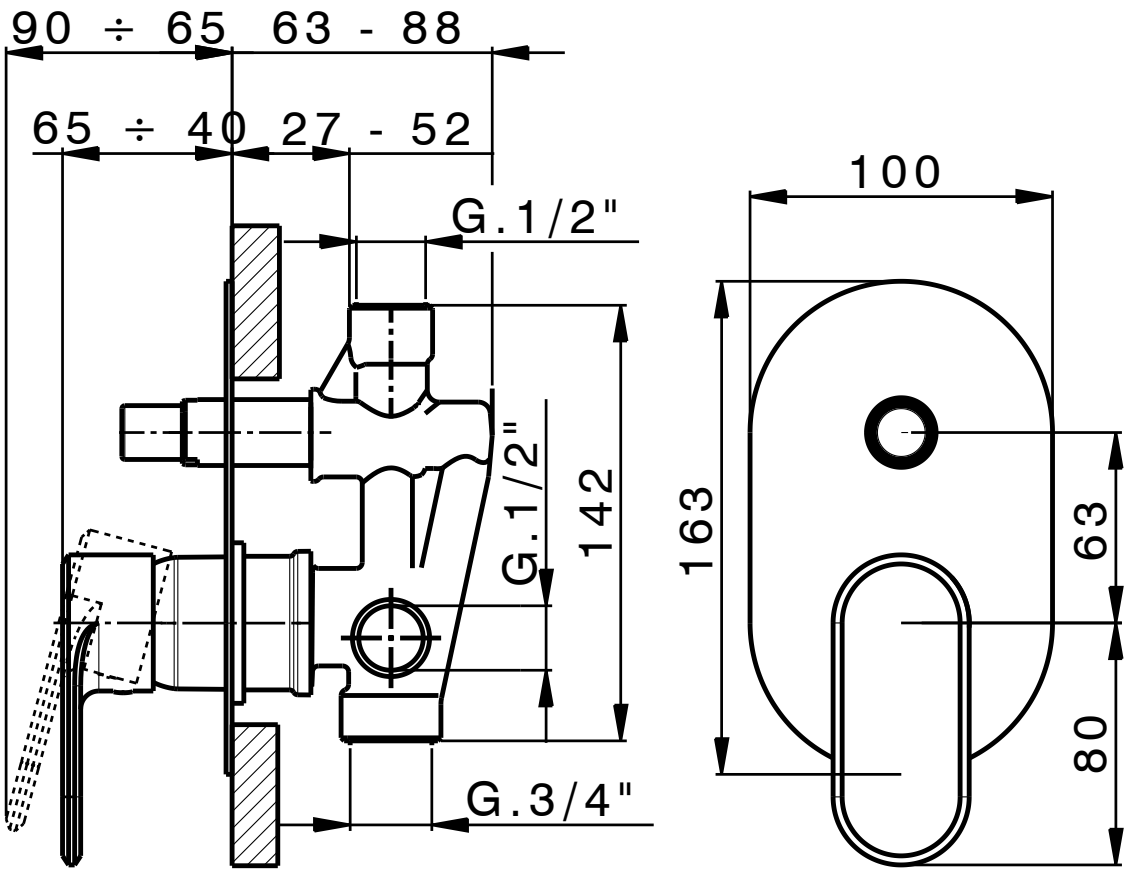

CIFIAL®
www.cifial.co.uk
sales@cifial.co.uk

dimensions mm

Code: 32470EM

technical specifications

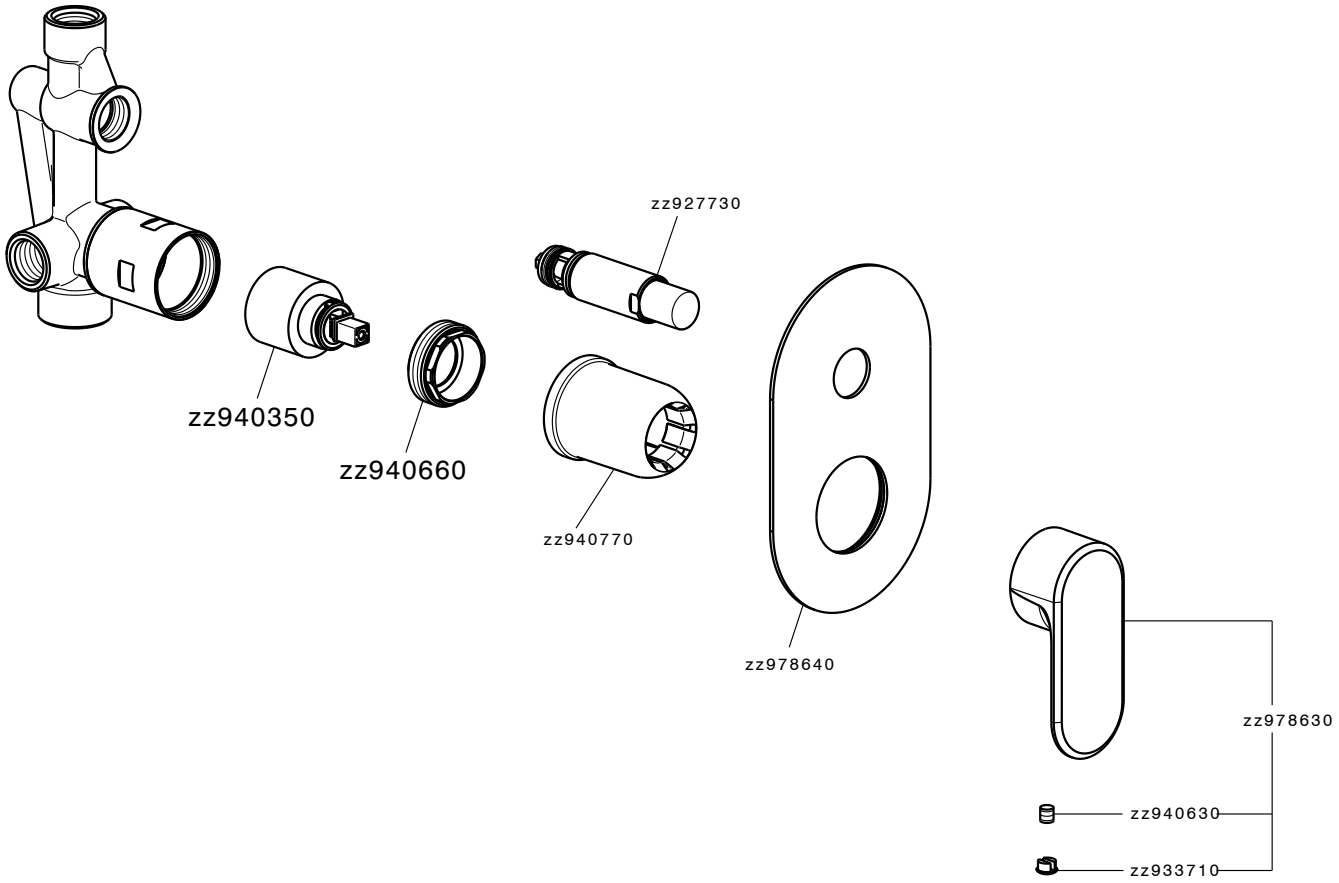

CIFIAL
www.cifial.co.uk
sales@cifial.co.uk

dimensions mm