EMMIE

Mono bidet mixer

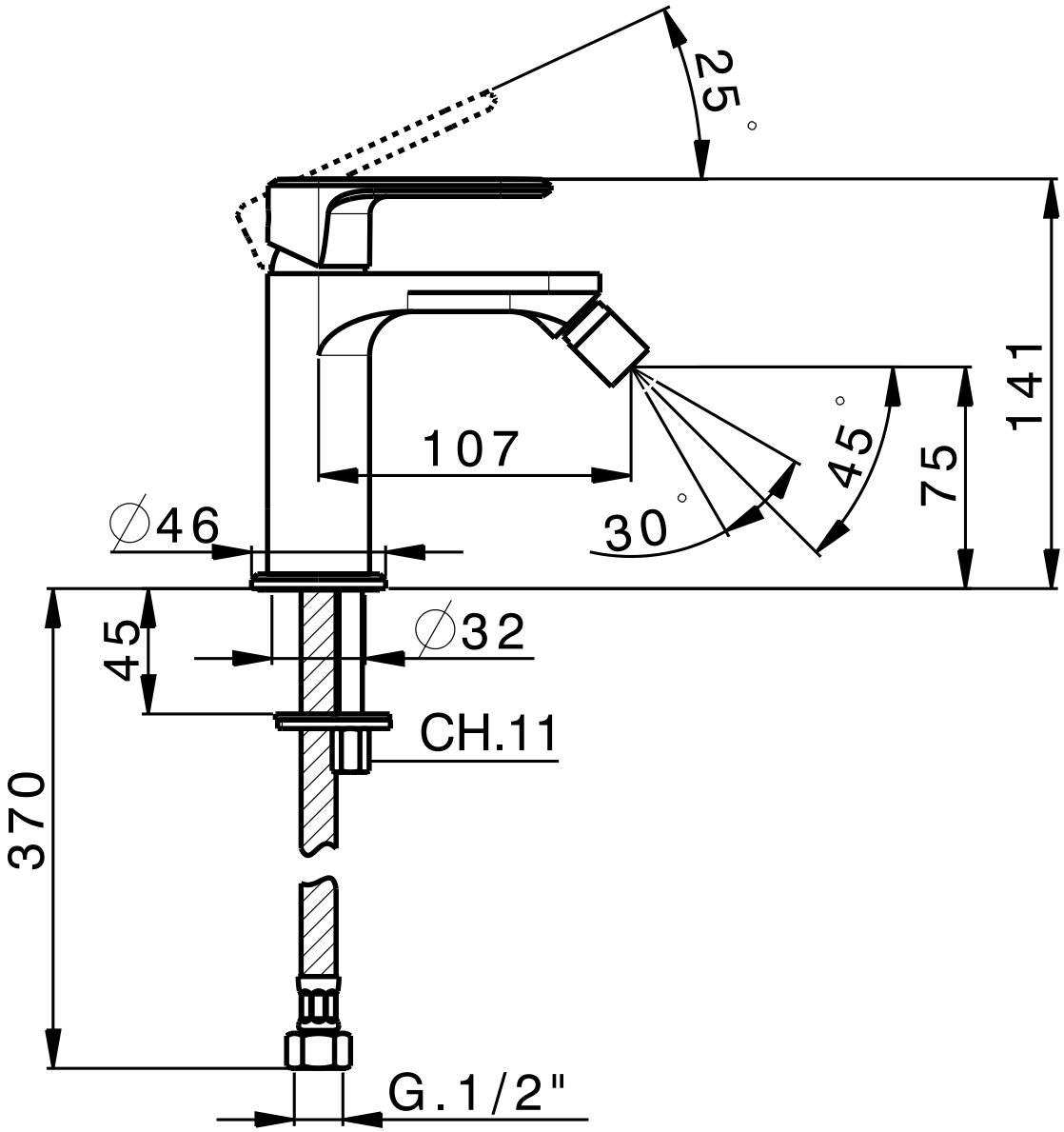

CIFIAL©
www.cifial.co.uk
sales@cifial.co.uk

dimensions mm

Code: 32410EM

technical specifications

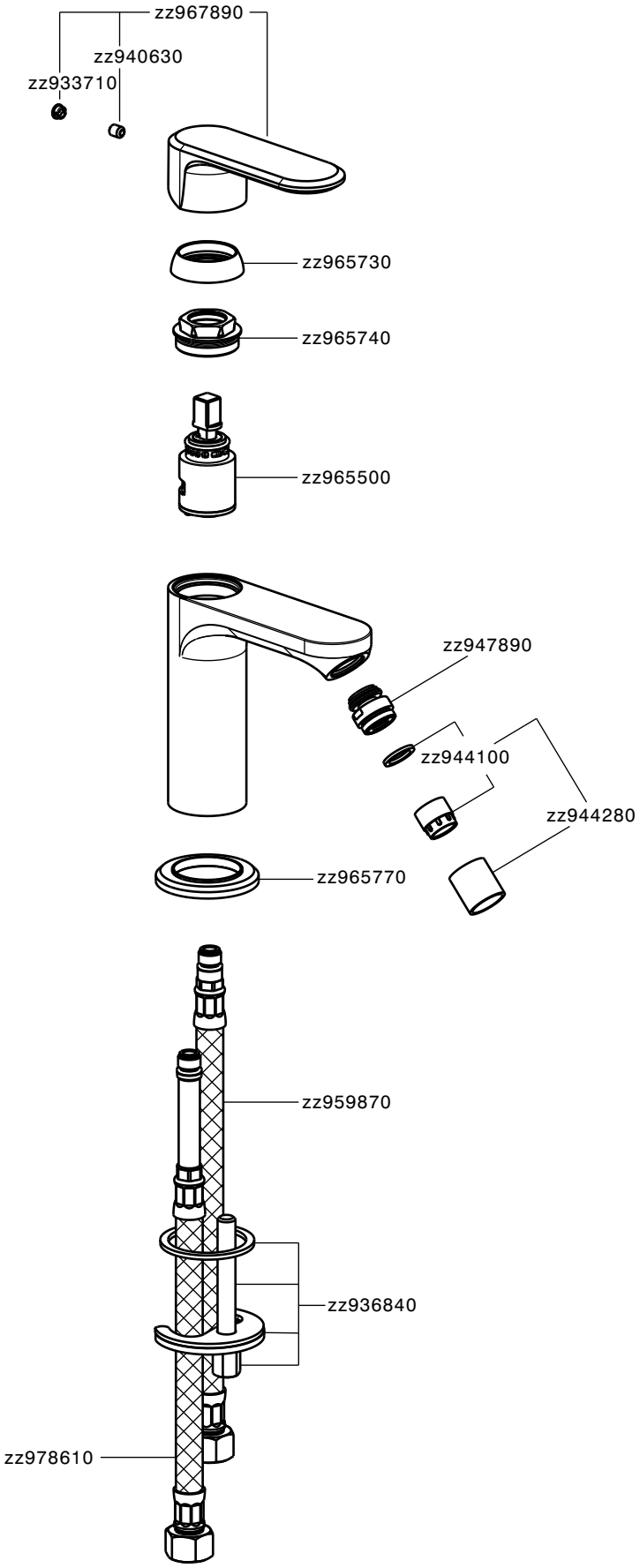

CIFIAL

www.cifial.co.uk
sales@cifial.co.uk

dimensions mm