cifial

Excellence

Excellence 5 hole deck bath mixer

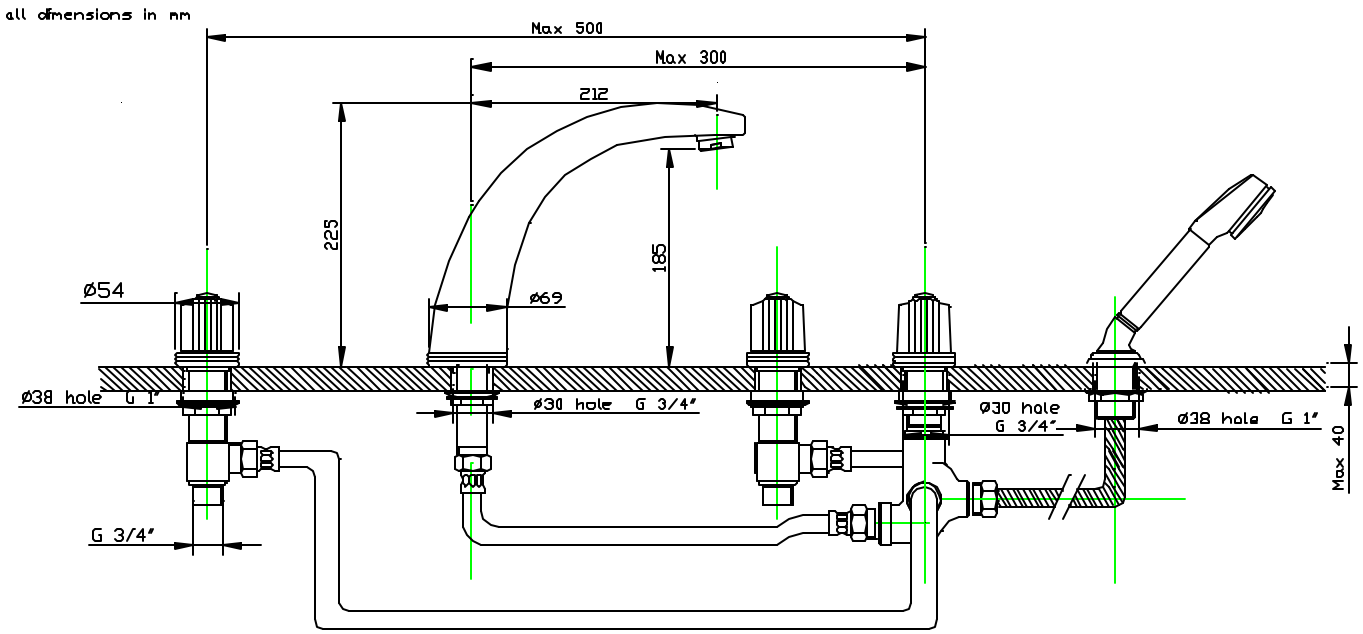

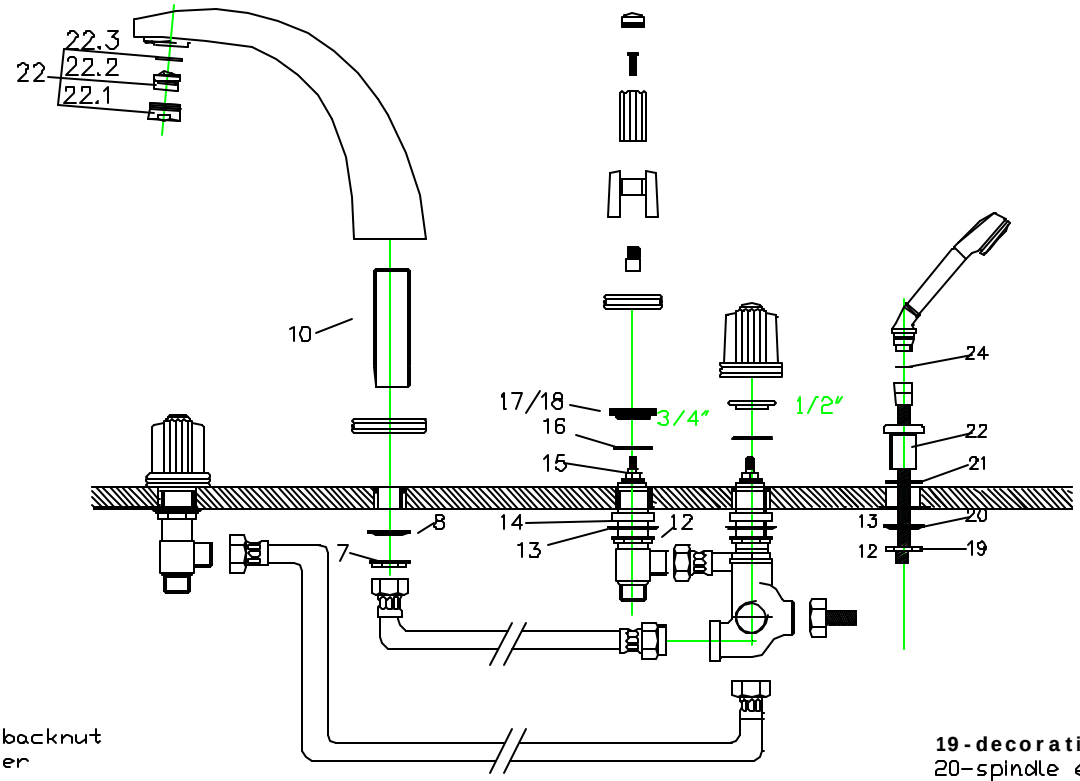

1-1/2" backnut
2-washer
3-o-ring
4-tee asssembly
5-o-ring
6-washer
7-3/4" backnut
8-dished washer
9-collar

19-decorative base
20-spindle extension
21-aerator
21.1-housing
21.2-flow straightener
21.3-washer
22-outlet connection
23-allen screw
24-handwheel cover