CIFIAL S.A.
Avenida de Santiago n.º184
4520-470 Rio Meão | Portugal
Tel. +351 256 780 100
cifial@cifial.pt | www.cifial.pt

CIFIAL®
since 1904

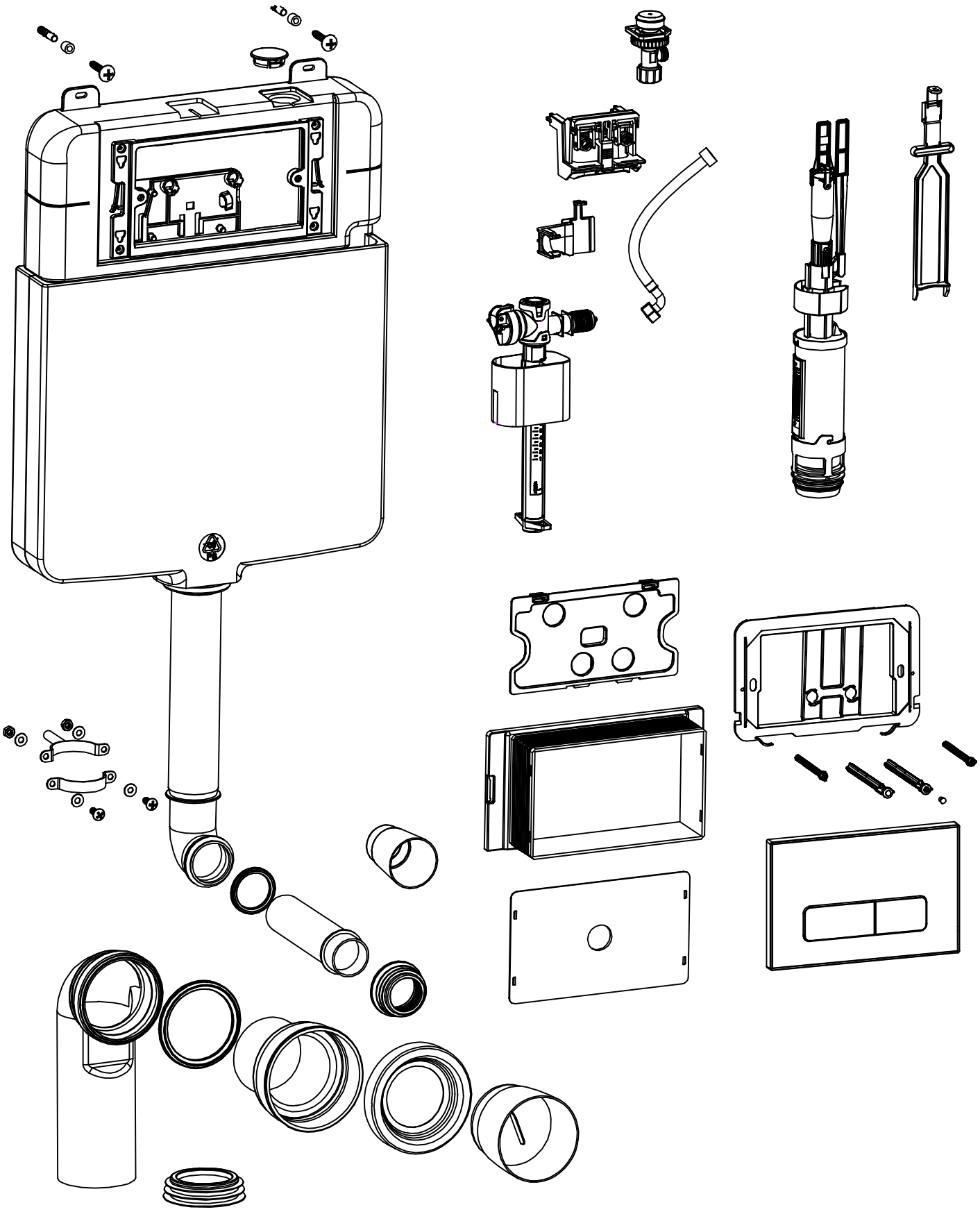

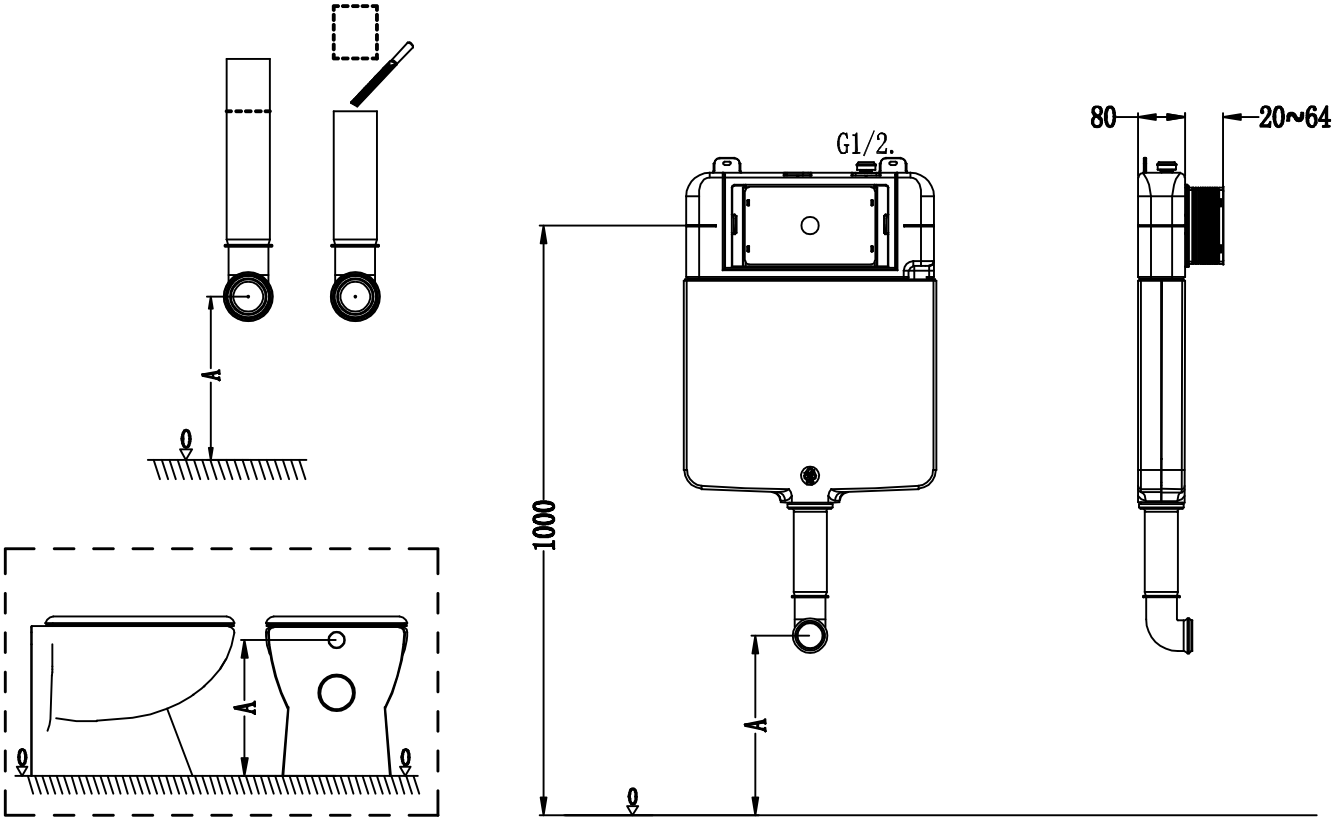
G1/2.
80
20~64
1000
A
A
A
0
0
0
0

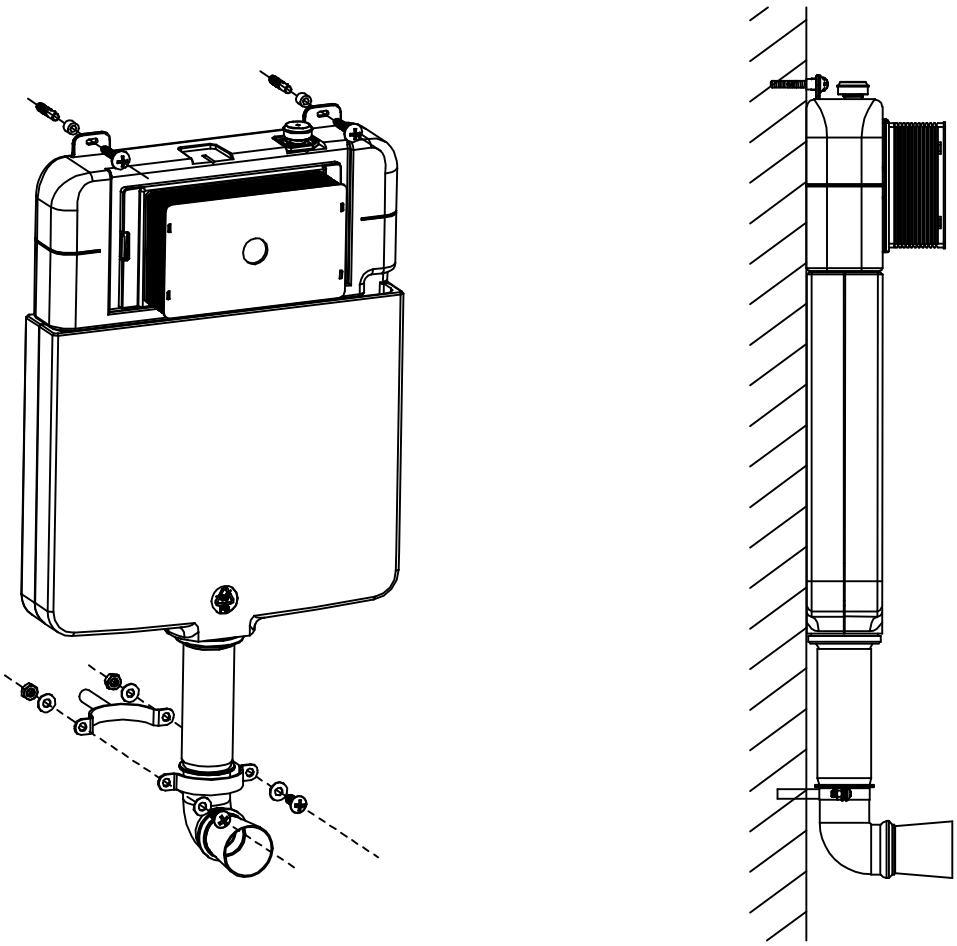

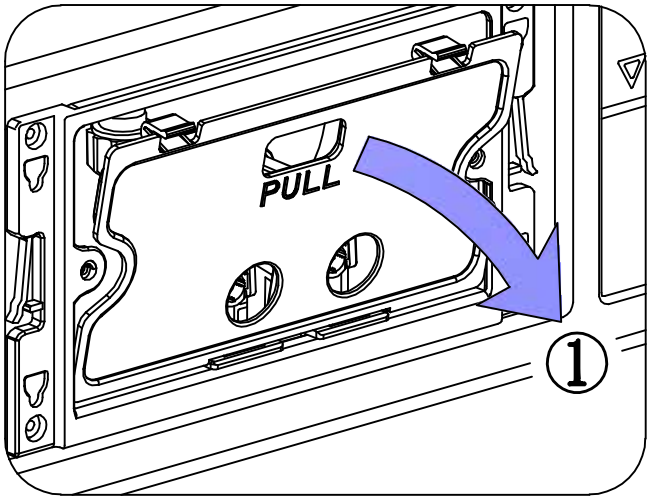
PULL
①

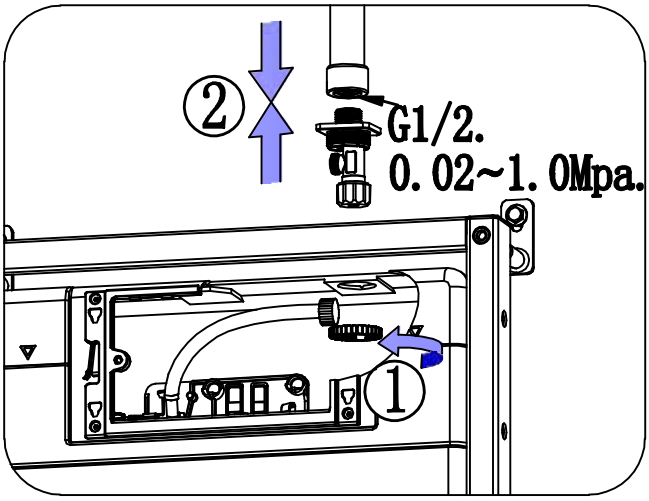
②
G1/2.
0.02~1.0Mpa.
①

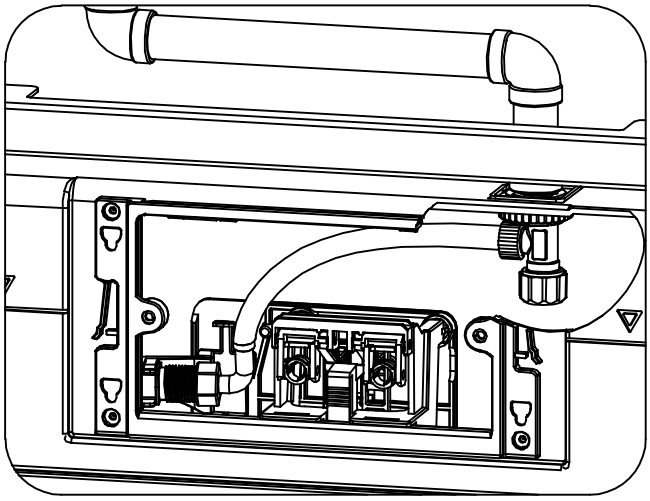

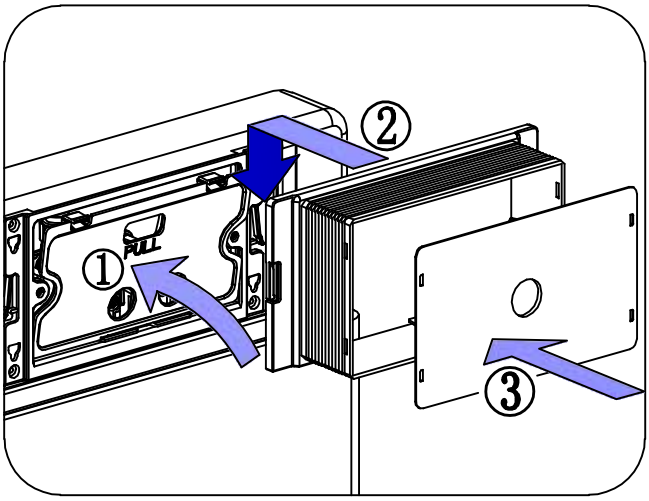
②
①
PULL
③

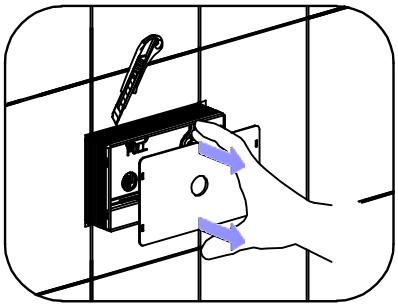

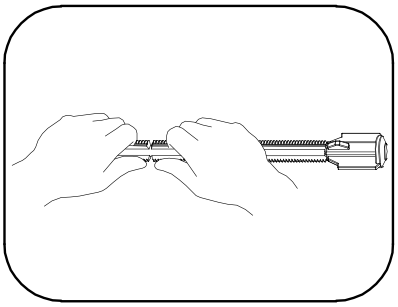

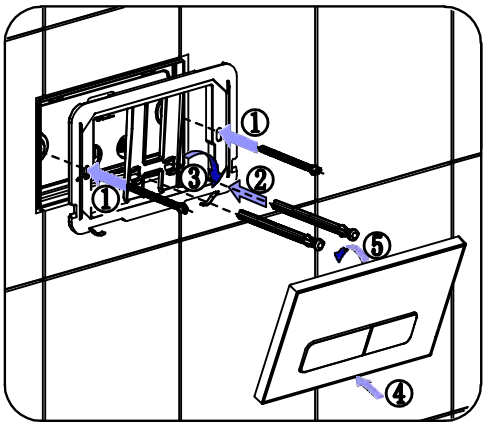
①
③
②
①
⑤
④

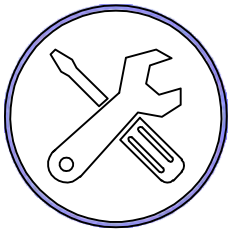

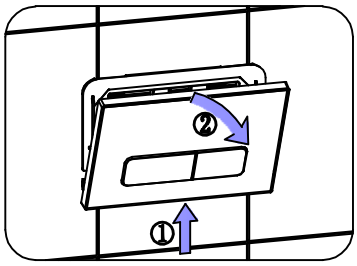
②
①

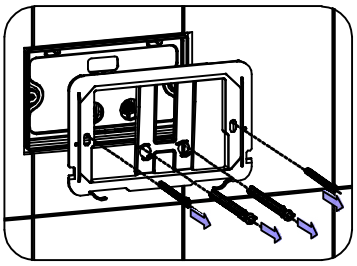

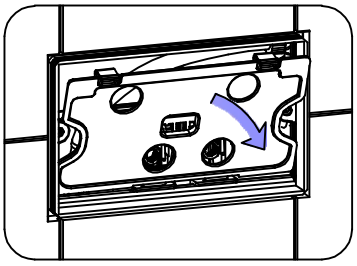

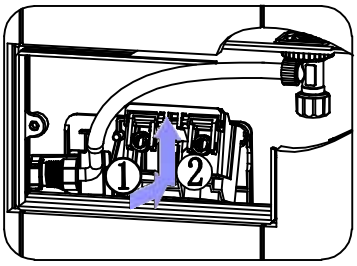
①
②

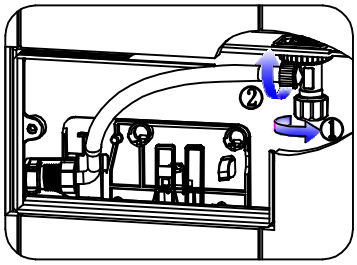
②
①

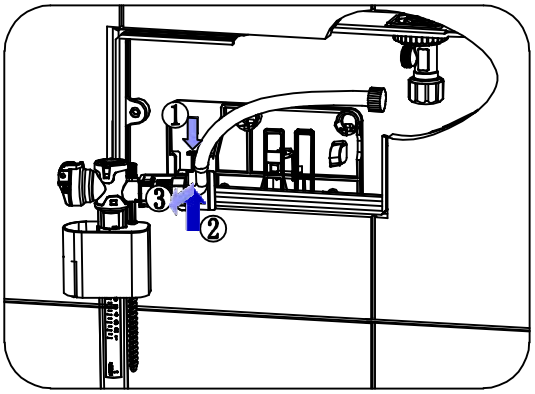
①
③
②

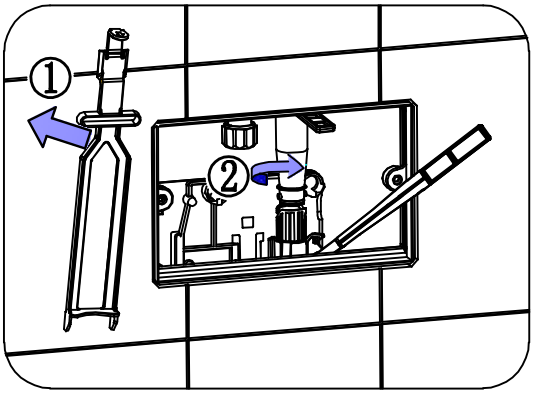
①
②

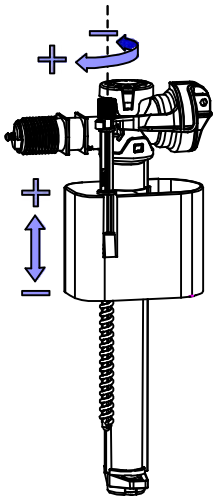
+
+
−

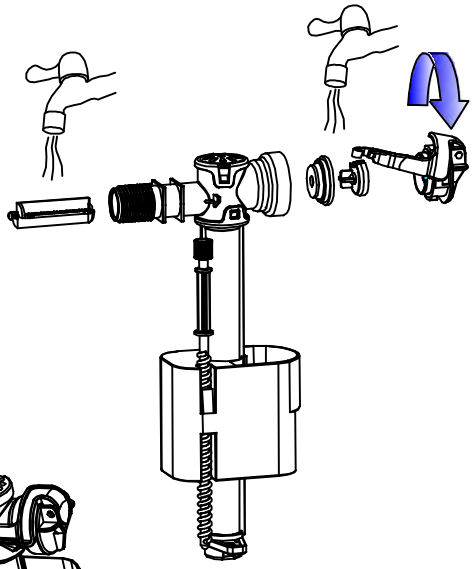

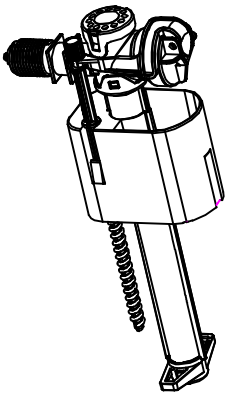

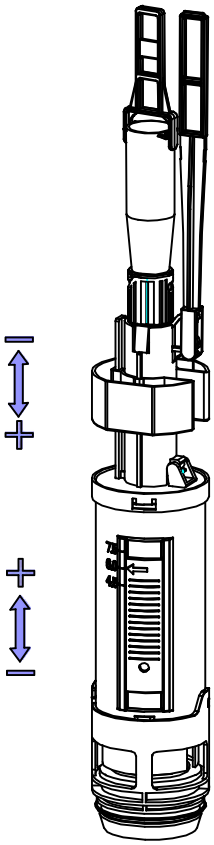
−
+
+
−