Code: 32400HM

technical specifications

HEXA

Mono basin mixer

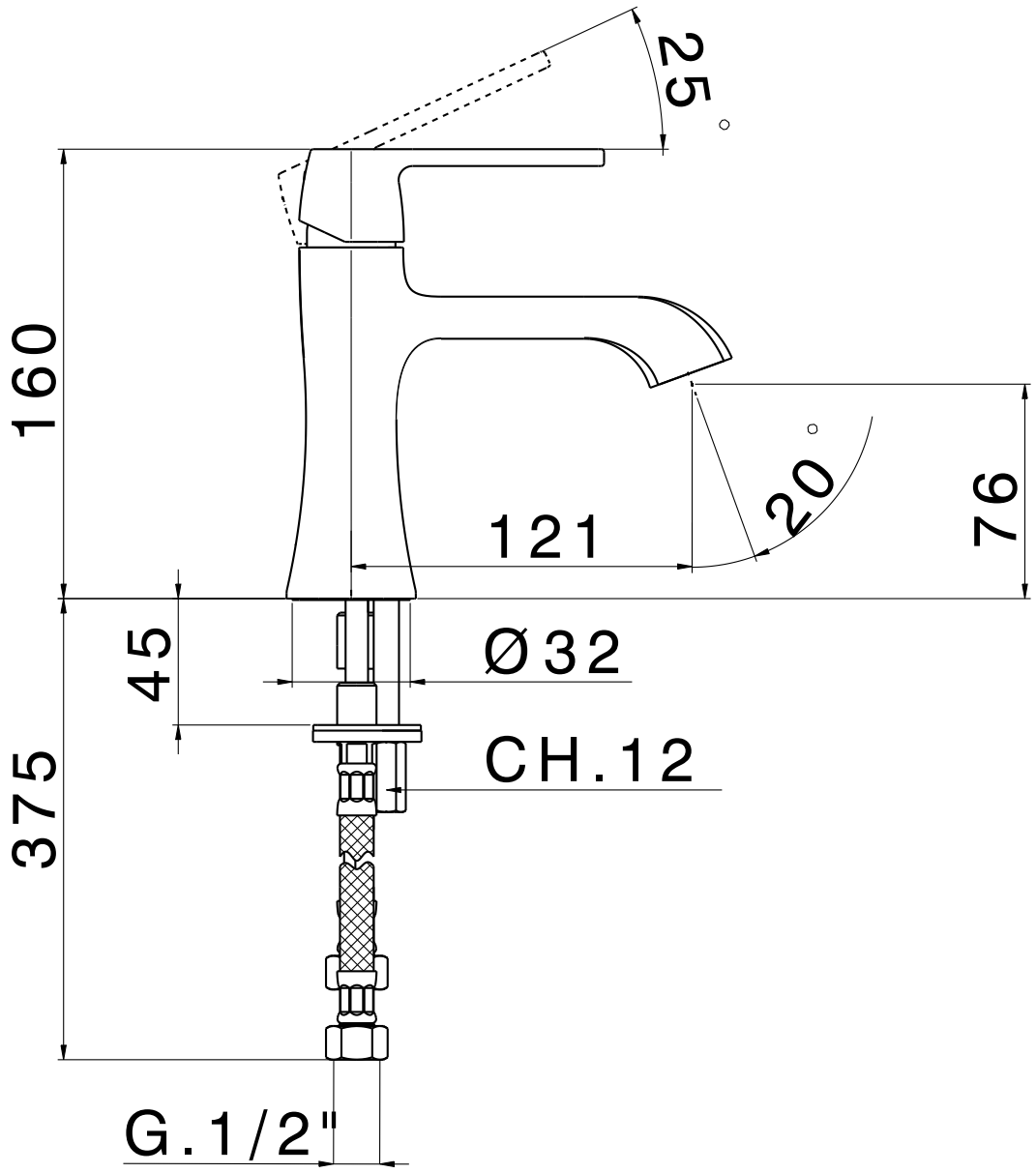

CIFIAL®
www.cifial.co.uk
sales@cifial.co.uk

dimensions mm

Code: 32400HM

technical specifications

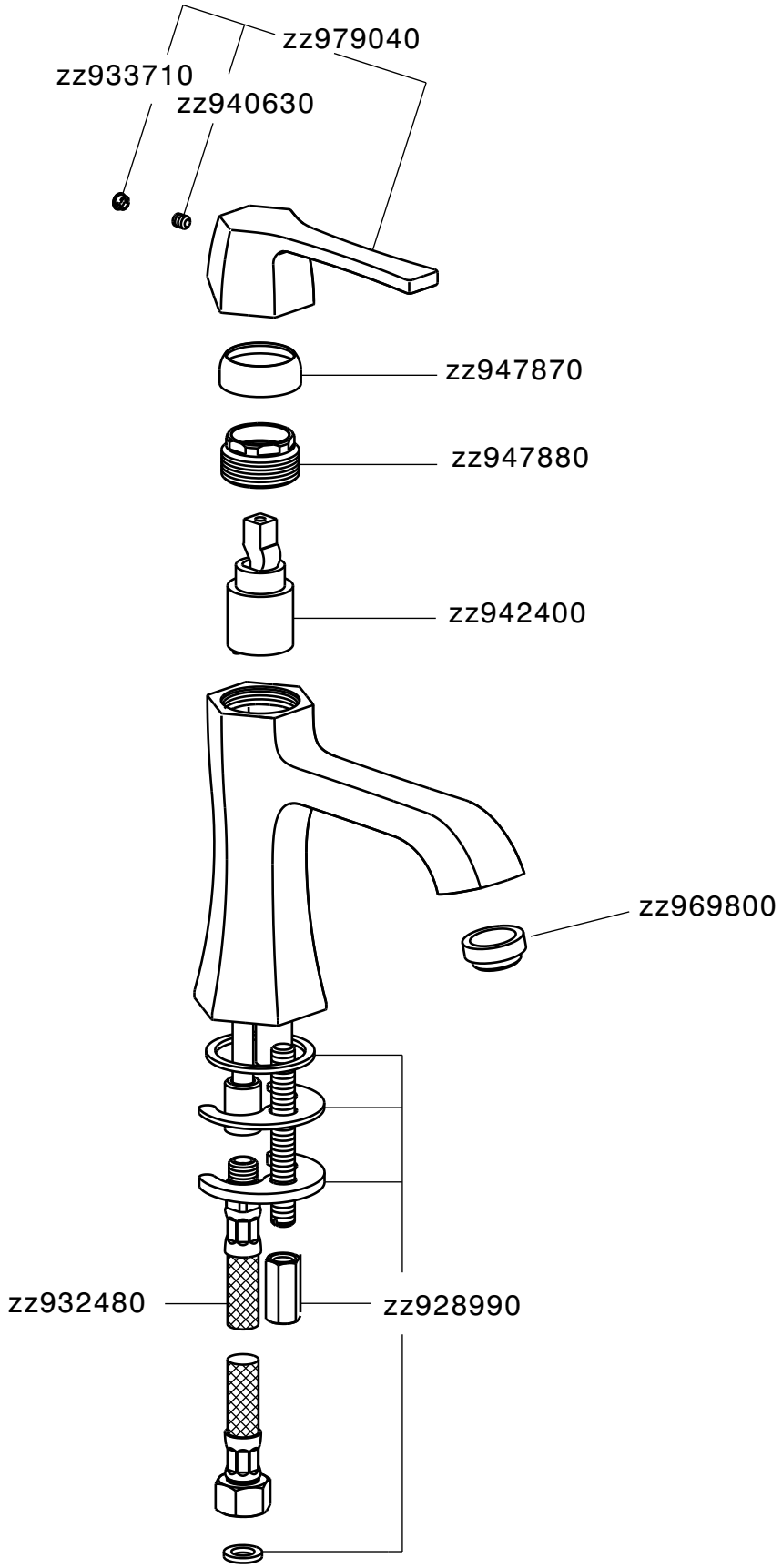

CIFIAL

www.cifial.co.uk
sales@cifial.co.uk

dimensions mm