Code: 31430HM

technical specifications

HEXA LEVER

3 hole deck bath valve

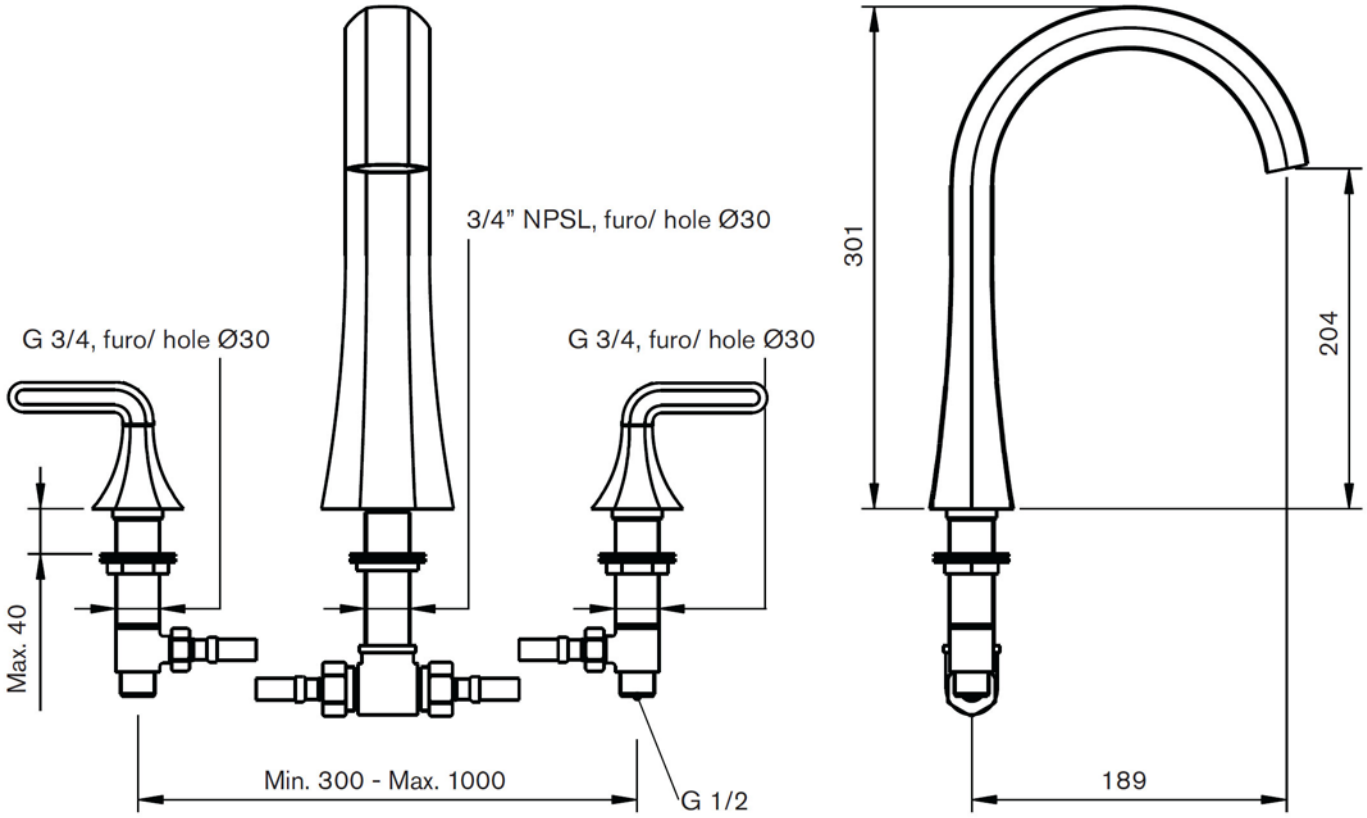

www.cifial.co.uk
cifialuk@btconnect.com

dimensions mm

Code: 31430HM

technical specifications

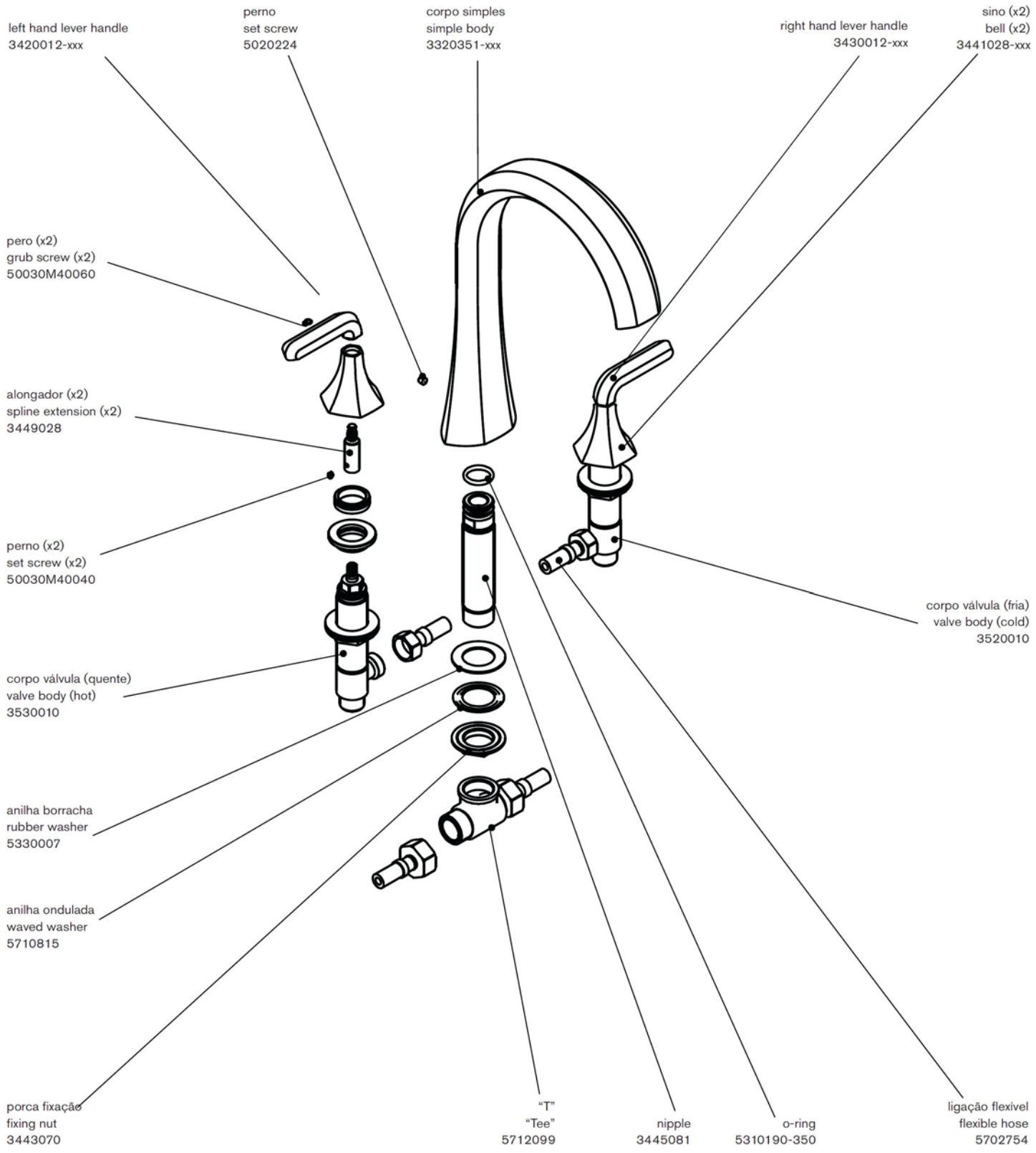

CIFIAL

www.cifial.co.uk
cifialuk@btconnect.com