# *Techno 465*

## 3/4” wall stop valve

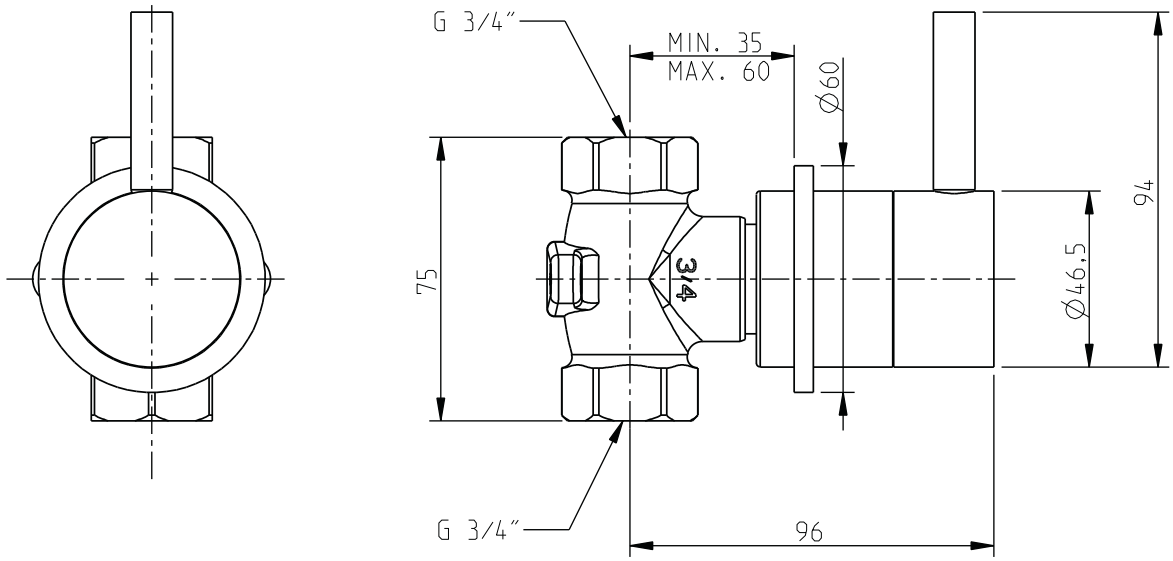


CIFIAL

www.cifial.eu

dimensions mm

5665440
983TH007U00

# code: 32217TH-xxx.U

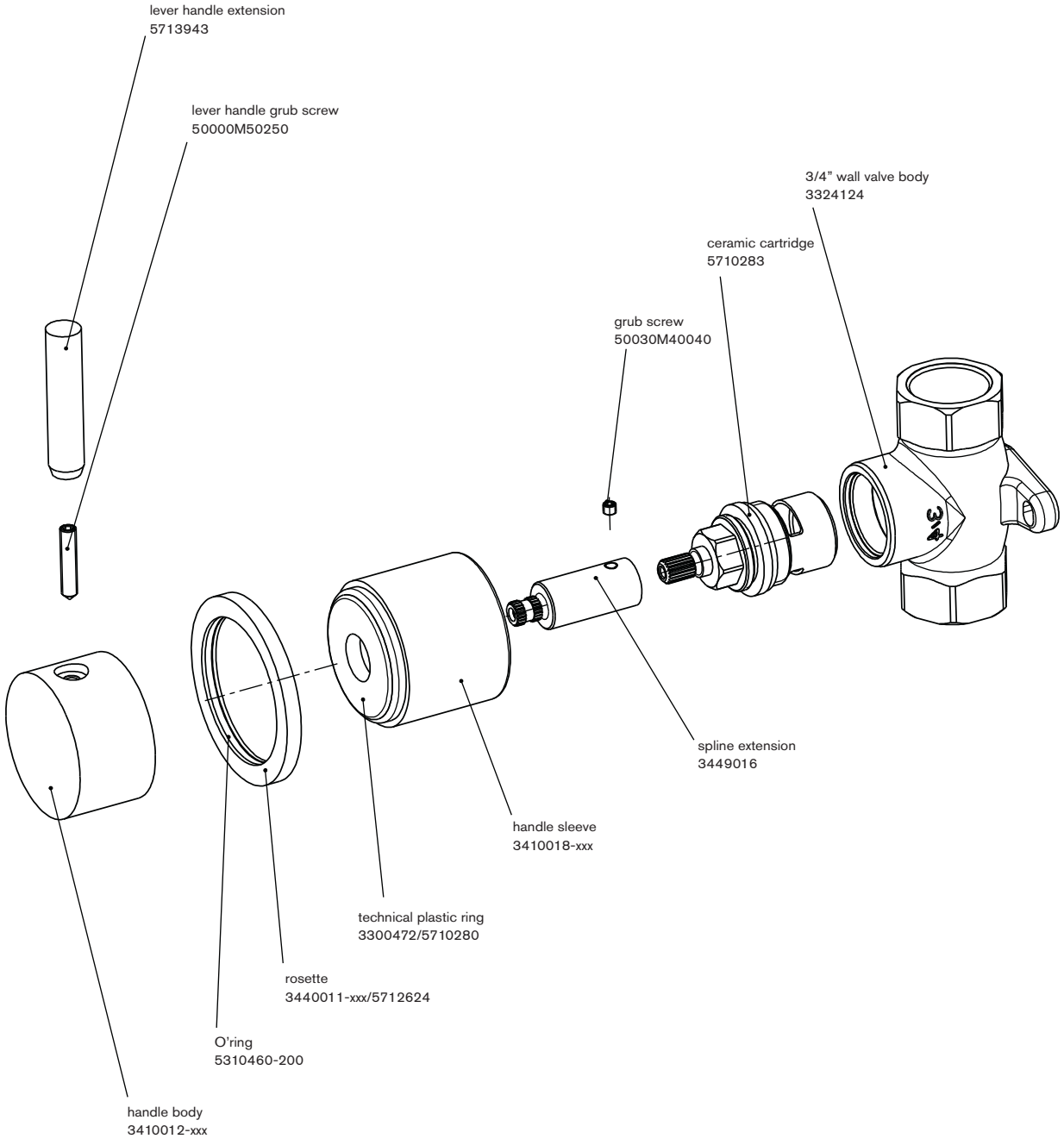




Notes:
xxx represent different finishes

Installer: Please leave all leaflets with the building owner to file for future reference

5665440
983TH007U00