Code: 32402VV

technical specifications

VIVA

2 hole wall basin mixer

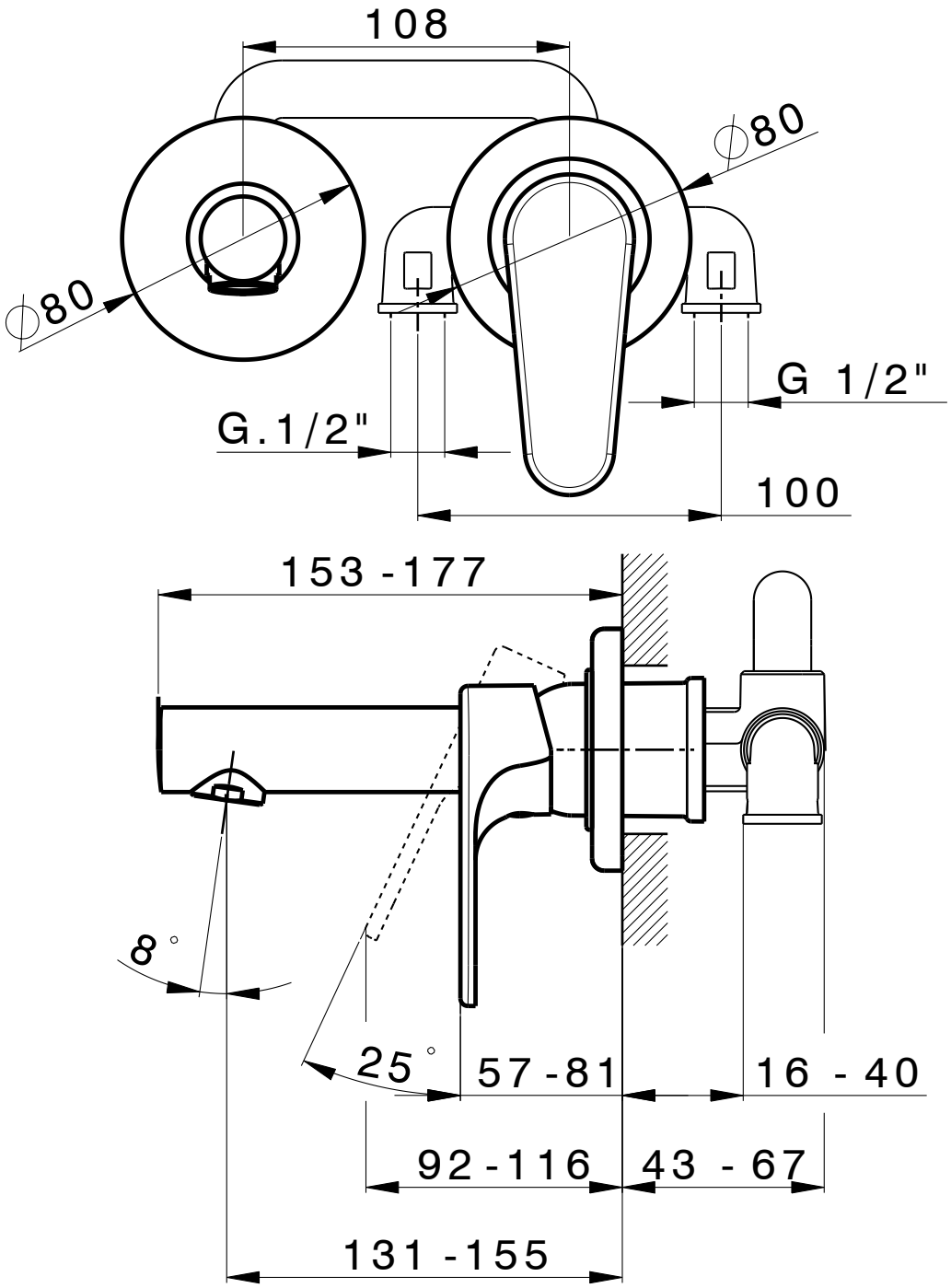

CIFIAL

www.cifial.co.uk
cifialuk@btconnect.com

dimensions mm

Code: 32402VV

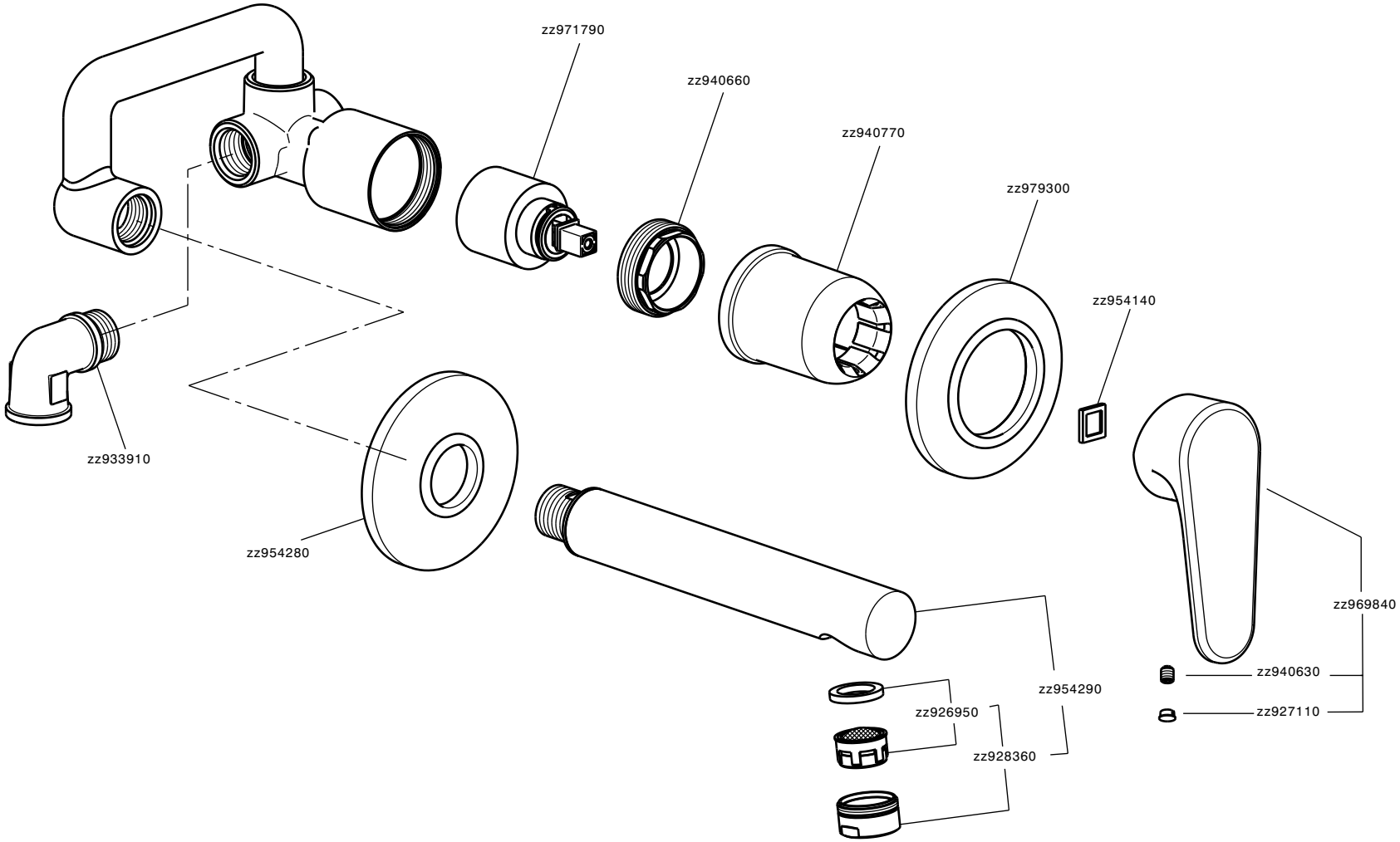

www.cifial.co.uk
cifialuk@btconnect.com

dimensions mm