Code: 32400VV

technical specifications

VIVA

Mono Basin Mixer

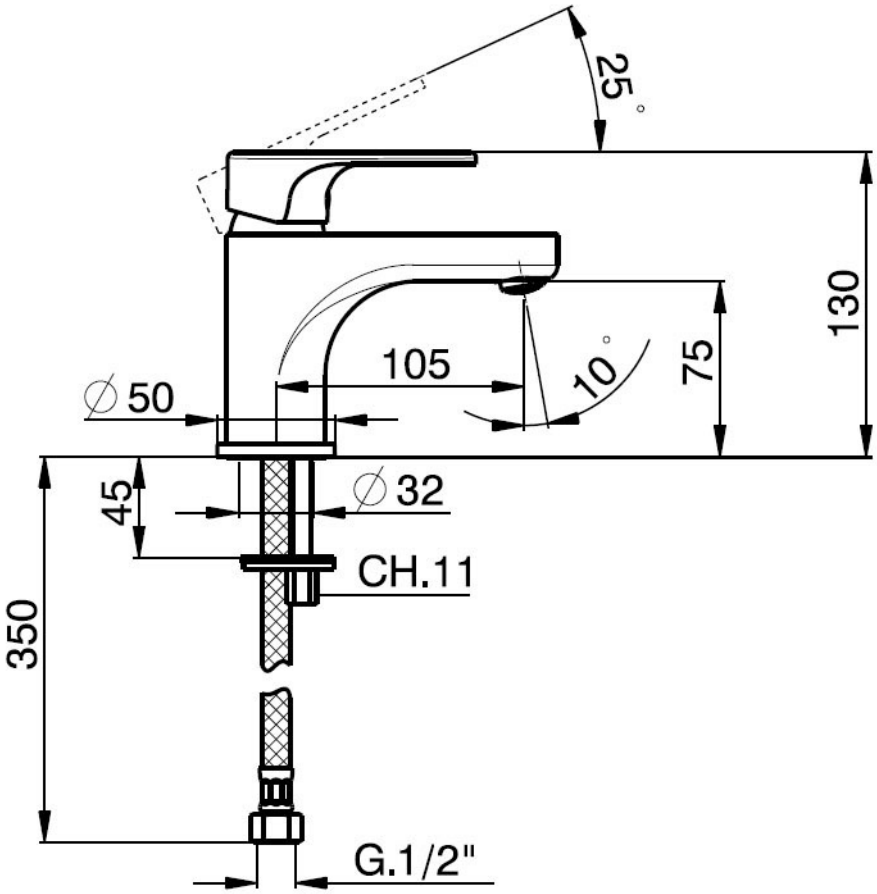

CIFIAL®

www.cifial.co.uk
sales@cifial.co.uk

dimensions mm

Code: 32400VV

technical specifications

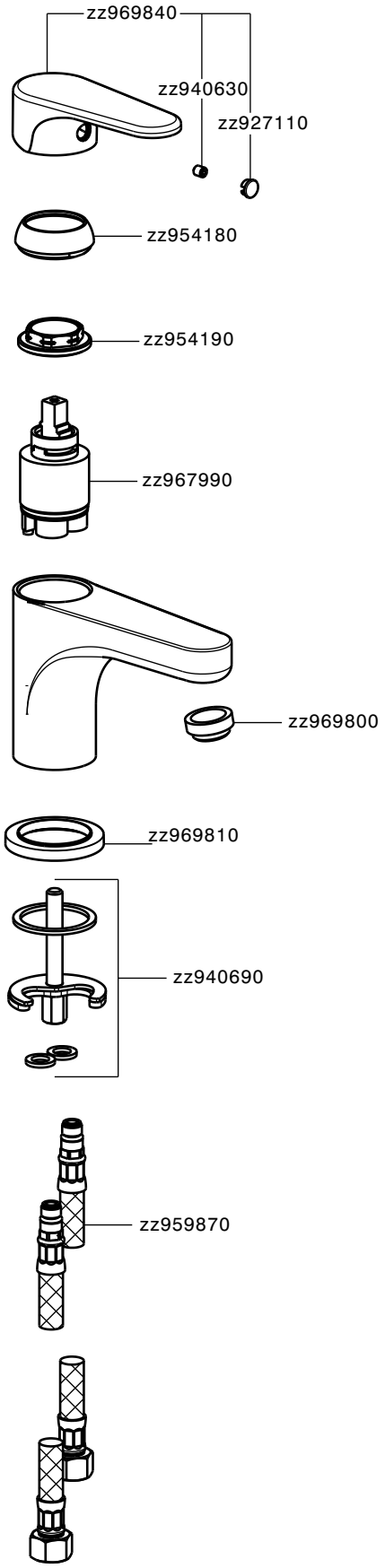

CIFIAL

www.cifial.co.uk
sales@cifial.co.uk

dimensions mm